INC

VAA10901-R.3481.A

作成承認印	配布許可印
ニコン 映像カンパニー CS推進部 GM	

D1

VAA10901
(JAPAN/NTSC)

VAA10902
(USA/EN/NTSC)

VAA10903
(EP/PAL)

REPAIR MANUAL

Nikon | NIKON CORPORATION
Tokyo, Japan

Copyright © 1998 by Nikon Corporation.
All Rights Reserved.
無断転載を禁ず !!

Printed in Japan September 1999

VAA10901-R.3481.A

Specifications

1. Mechanical configuration · M1

2. Electrical Hardware Configuration · M2

Basic configuration block diagram · M3

Circuit configuration · M3

Description of functions (Main FPC) · M4

Main IC functions (main FPC) · M5~M6

Communications configuration diagram · · · · · · · · · · · · · · · · · · · M7

Main functions of main FPC · M7~M13

Compressed recording board · M14

TFT peripheral circuits · M15

Recording format · M16~M17

1. Specifications

(1) Mechanical configuration

The camera function section of the unit's mechanical block is basically inherited from the F100 and other SLRs.

Changes to the shutter and additions such as a CCD bracket and rear body (required when configuring a digital camera) have also been made.

1) Common camera parts

Front panel assembly: Lens mount, mirror box, AF module, sequence board, prism box, etc.

Top cover assembly: Power switch, various buttons, various dials

Bottom cover: Vertical position release and other operation parts

2) CCD bracket assembly

A CCD board and optical LPF are attached to the CCD bracket to form this assembly. The CCD bracket assembly ensures precision and, when linked with a die-cast boss (machined surface), ensures precision of the installation position of the supported

[Precautions on Handling CCDs]

If dirt gets on the CCD (optical LPF surface), shadows of this dirt will appear as black dots on the image being captured. The optical LPF surface is made from a very easily scratched material and requires particular care when cleaning. Also, since there is a possibility of damage due to static discharge, always use a wristband and conducting mat when handling. If the CCD becomes damaged, replace the entire CCD bracket and perform shooting image adjustments.

3) Rear cover assembly

The unit is equipped with a 2-inch TFT LCD monitor and C/F card socket for displaying the recording image.

4) Shutter assembly

Having a rear shutter construction, the shutter is used to block light from the CCD to reduce CCD output noise.

Exposure control is handled by the CCD electronic shutter.

The shutter is painted a gray color (reflectivity 50%) so that it may act as a reflective surface for TTL light adjustment when using a speed light (SB-28DX).

2. Electrical Hardware Configuration

(1) The MCUs built into D1 represent the following microcomputers and processors.

Name	Model No.	Manufacturer	Description
SUB-MCU	H8/3832s	Hitachi	8-bit, w/ built-in LCD driver, 32-KHz sub-clock, ROM/RAM-16K/512
FD-MCU	V850E/MS1	NEC	32-bit RISC
MAIN-MCU	H8S/2355	Hitachi	16-bit, ROM/RAM = 128K/4K, the flash model (H8S/2357) has 128K/8K
Image processing RISC	MPC823	Motorola	32bit RISC

(2) Basic configuration block diagram

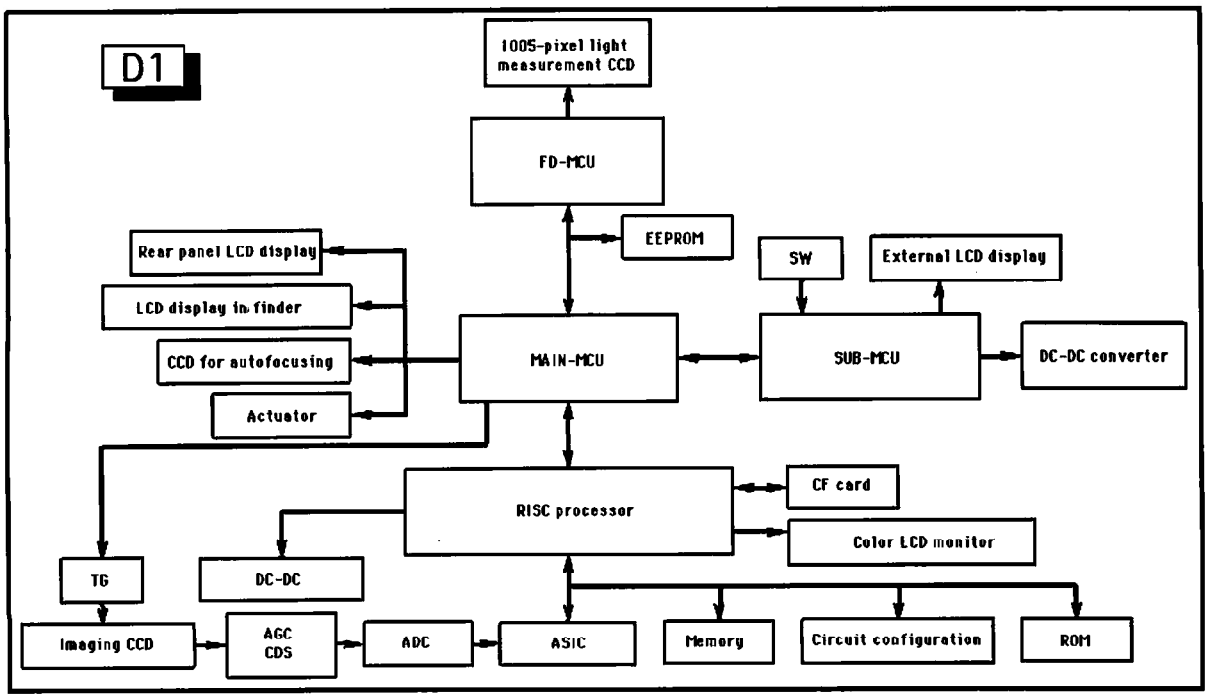

(3) Circuit configuration

The circuit configuration of the entire camera can be sorted into three systems: the CCD system, RISC system, and camera system.

●CCD system

This system consists of the CCD board, TG board, and CCD power supply board.

●RISC system

This system consists of the compressed recording board, PC I/F board, TFT drive board, TFT unit (with backlight), and inverter circuit.

● Camera system

Front body: Consists of a main FPC, post-command dial FPC, SQ-FPC, power FPC, DC/DC board, shutter FPC, Aperture FPC, CCD-WFPC, CCD-CFPC, CCD-RFPC, intermediate FPC for rewind side, AF selector FPC, 10-pin terminal FPC, TTL-FPC, AF-PI FPC, AF mode SW board,

f-f0 board, lens contact FPC, and an FPC for writing the main flash memory.

Top cover: Consists of a pre-command dial FPC, three FPC, and top cover FPC.

Bottom cover: Consists of a bottom cover FPC.

Rear cover: Consists of a rear panel display FPC

(4) Description of functions

1) Main FPC

The main functions executed by each MCU are listed below.

●SUB-MCU

- Drives external information LCD
- Starts camera power and controls power during transition to sleep status
- Detects status of setting and operation system switches
- Controls LED illumination for illumination inside finder
- Performs pulse output for adjusting brightness of superimpose LED
- Identifies power
- Communicates with MAIN-MCU

●MAIN-MCU

- AF control
- Mechanical sequence control (aperture control, mechanical shutter control)
- Generates CCD electronic shutter timing signal
- Strobe communications and strobe control
- Retrieves lens information
- Controls display of LCD inside finder and rear panel LCD
- Test communications control
- Information LCD backlight (EL) control
- Detects status of moveable system and operation system switches
- Exposure calculations
- Concentrated management of camera mode and setting information
- Communications with SUB-MCU

- Communications with FD-MCU
- Communications with image processing RISC
- Realtime clock module control
- EEPROM communications control for storing adjustment values and resume data
- Anti-vibration lens control
- Battery check

●FD-MCU

- Light measurement and color measurement calculations
- 1005-division CCD control
- Communications with MAIN-MCU

2) Compressed playback board

The main functions executed by the image processing RISC are listed below.

- Imaging CCD control
- Image data processing
- Image ASIC control
- MAIN-MCU communications
- Monitor LCD control
- PC communications control
- Recording media check and read/write control
- Camera control during communications with PC
- Video signal output control
- DC-DC converter control for imaging CCD and peripheral Circuits

3) Main IC functions (main FPC)

●U1: Main microcomputer (H8S/2355), flash-type

Various mode control, AF control, TTL control, mechanical sequence control, speed light communications, lens communications, 10-pin terminal communications, sub-microcomputer communications, finder microcomputer communications, RISC (U823) communications, creation of rear panel monochrome LCD display data, creation of top panel LCD display data

●U2: Sub-microcomputer (H8/3822S)

Communications with external switches, external LCD communications (lighting), actuator control, camera power system control, DC-DC power board control

●U3: I/F IC (M52966FP)

Speed light communications, chip select function

●U301: Finder microcomputer (V850E/MS1), flash-type

1005-sensor control, light and color measurement calculations

●U4: EEPROM (X25330)

AF adjustment values, finder adjustment values, mechanical adjustment values, TTL adjustment values, 1005-sensor adjustment values, battery check voltage adjustment values, storage of control-related parameters, storage of various settings at power restart

●U5: Realtime clock (S-3511A)

Clock drive (driven by backup battery)

●U302: Driver IC for finder LCD

Finder LCD communications (lighting)

(4) Communications configuration diagram

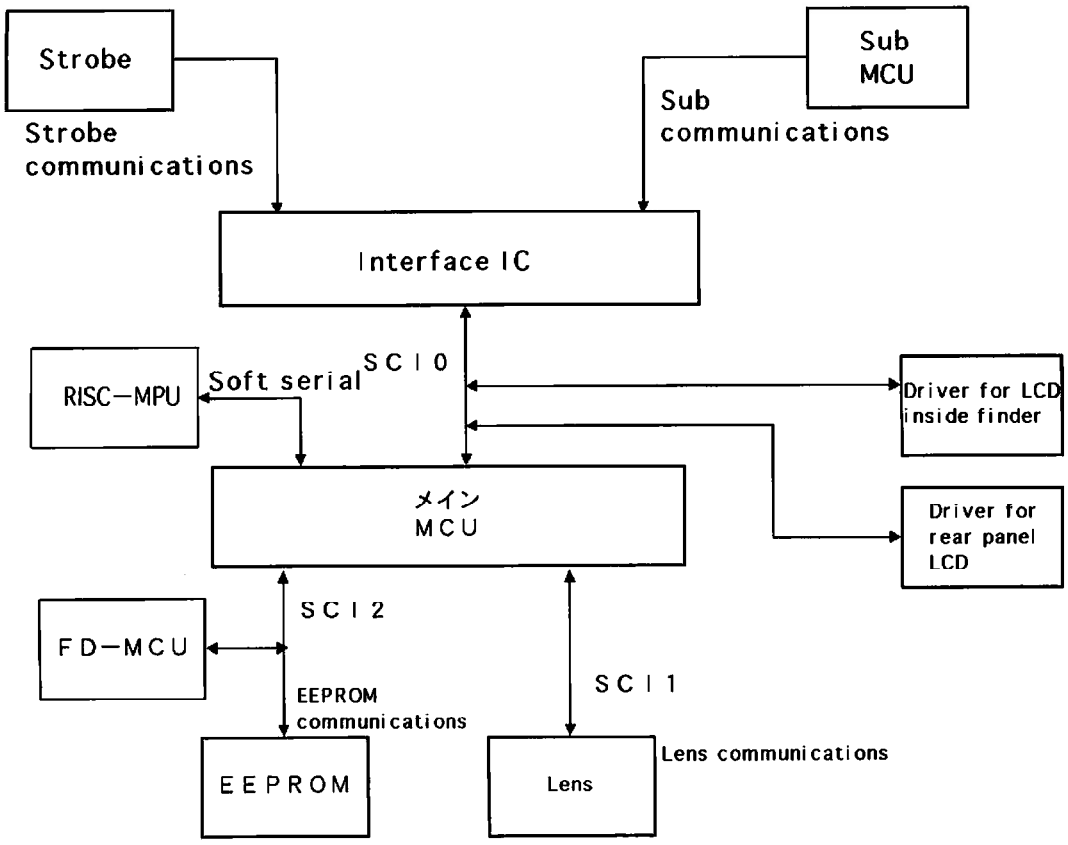

(5) Main functions of main FPC

1) MAIN-MCU

●AF control

D1 incorporates an "AP4 module" as a focus detection system. With a five-point focus area (center, left-right, top-bottom), dual cross-type sensors are used for each the center and the left-right sensors. Depending on the brightness, the fine sensor (for normal conditions) or rough sensor (for low brightness conditions) is selected and focus detection performed.

Depending on the amount of defocus detected, focusing is performed automatically by controlling the drive of the camera's AF motor when a coupling drive direction lens is attached or by indicating the drive amount via communications with the lens when an intelligent lens (AF-S or AF-I) is attached.

If the photographic subject is determined to be a moving object, moving object tracking control is performed so that the focal image plane of the photo lens matches

the motion curve of the focal position image plane of the moving object.

AF control sequence processing flow is as follows:

AF CCD calculation

⇓

Defocus calculation

⇓

Lens drive amount calculation

⇓

Lens drive control

●Power control

A power supply especially designed for the realtime clock module and the main power for all camera operations is used as the D1 power supply. Main power is supplied from DC-IN by a detachable
Ni-MII pack or a jack plug-in. Realtime clock module power is supplied from a coin-shaped lithium battery built into the body.

Power is always supplied to SUB-MCU when a battery pack is tracking control is performed so that the focal image plane of the photo lens matches attached (when there is external DC-IN input) and camera power (referred to as DC-DC-1 below) is started and controlled by detecting switch operations.
When DC-DC-1 activates, power is supplied to the camera block including MAIN-MCU and to the RISC circuit block including MPC-823. Power to the imaging CCD circuit block (referred to as DC-DC-2 below) is controlled by MPC-823 so that it basically only operates during photo operations. Cut-off of DC-DC-1 is performed by the MAIN-MCU. The MAIN-MCU finds the status of the peripheral circuit unit and manages overall operational status, detects cut-off conditions such as the main switch being turned off or time-up of the focus-hold function, checks that there is no obstacle to performing cut-off, and issues a cut-off command by communication with the SUB-MCU.
Based on the command from the MAIN-MCU, the SUB-MCU cuts off DC-DC-1 and

places itself in low power consumption mode and continues this status until any of the switches are operated.

●Release control

The release sequence starts at the point that releasability is recognized based on release startup identification. At this time, regularly repeated processing such as light measurements and distance measurements stop and processing especially for release sequence control is performed.

Release sequence control can be divided into three categories: mirror up control, electronic shutter control, and mirror down control.

Mirror up control consists of mirror up drive, mirror up error detection, updating of the display during release, preparations for TTL light adjustment control, aperture control, and aperture control error detection.

When self-timer or red eye reduction settings are released, the unit transits to mirror up control after self-timer LED processing and red eye reduction processing (described later) has ended.

Under electronic shutter control, the electronic shutter time signal (seconds) is generated, light adjustment control is performed, and timing control for closing the mechanical shutter is performed.

Under mirror down control, mirror down control, mechanical shutter control error detection, and mirror down error detection are performed.

Other forms of control include: error recover control, preview control, TTL light adjustment timing control, AF lens drive during release, red eye reduction control, anti-vibration control, and cleaning operations control.

●Exposure calculations

Control TV and Control AV are calculated based on light measurement data (BV value) computed by the light measurement function.

●FD communications

Serial communications are performed between FD-MCU, which measures the light and color of the photographic subject, and MAIN-MCU, which performs system control for the entire camera, in order to transmit various types

of information. Clock synchronous, full duplex communications are used.
MAIN-MCU uses serial communications to send image data and other information to FD-MCU. Adjustment data values are also sent to FD-MCU only immediately after power is turned on.
FD-MCU repeatedly obtains the latest light and color measurement data for the photographic subject, and sends the results to MAIN-MCU.
When the camera enters test mode due to communications between an external device and MAIN-MCU, MAIN-MCU uses communications data to send a transit-to-test-mode command to FD-MCU. After this, FD-MCU enters a test communications mode in which each operation is directed and controlled by command.

●Lens communications

Communications are performed with the CPU lens via the lens contacts.

●Typical CPU lenses (excludes the IX NIKKOR)

Communications for obtaining the LDATA for all the various types of lenses including the latest D28 lens are performed, and that data is used by main functions such as AE and AF.

●AF-S, AF-I lenses

Communications necessary for controlling the AF motor drive built into these types of lenses are performed.

●VR lenses

Communications necessary for controlling the anti-vibration motor drive built into these types of lenses are performed.

●TC16AS

Although determination as to whether or not a TC16AS is attached is performed, no communications are performed.

●SB communications

Communications are performed with an external strobe via a hot shoe.

●RISC communications

Various information is transmitted between the RISC-MCU, used for image processing, and MAIN-MCU, which controls camera systems. Photographic operations, playback, and PC connection functions are achieved through this linked operation. There are two types of communications between MAIN-MCU and RISC-MCU: serial communications and special communications using the MCU port.
In photographic mode, release requests, changes in operation mode, checking for memory cards, and other operations are started by communications from MAIN-MCU and information is exchanged as necessary.
In playback mode, RISC-MCU is operational, and information mainly representing the status of switches and so on is sent from MAIN-MCU to RISC-MCU.

In PC mode, RISC-MCU becomes the focus of communications as data for controlling camera operations according to commands from the PC are sent to MAIN-MCU.
Excluding statuses unique to test mode, in non-release sequences during photographic mode the RISC-MCU is placed in low power consumption mode. Wake-up is performed by communication startup.

●MAIN-MCU - imaging CCD I/F

MAIN-MCU determines the exposure time (in seconds) based on the photographic mode and light measurement values, and sends an

2) SUB-MCU: Description of basic operations

There are two operational power modes of the camera. The first is "camera power on" mode in which photographic and playback operations are possible. The second is "camera power off" mode in which the supply of power is stopped except to SUB-MCU. During this mode, SUB-MCU controls the external LCD display (including shut-off) and monitors for various causes to start camera power. If a cause occurs, camera power is quickly turned on.

SUB-MCU directly controls the camera power modes described above.
Specifically, SUB-MCU turns on/off the camera's power by controlling the on/off of the stabilized power supply (referred to as the "DC-DC converter" below) built into the camera. When the DC-DC converter is on (during power-on mode), power is supplied

to many circuits in the camera so that the camera may quickly begin photographic and other operations. When the DC-DC converter is off (during power-off mode), SUB-MCU operates the sub-clock and minimizes the power being consumed.
The transition from power-on mode to power-off mode is made based on a communications command from MAIN-MCU, which handles all camera control.
The transition from power-off mode to power- on mode is made when a startup request is input to the wake-up pin or interrupt pin of SUB-MCU or when a cause for wake-up is detected.
Also, there are various operational switches and mechanism switches located on the camera. One function of SUB-MCU is to detect the status of these switches without missing any changes. It sends that information to MAIN-MCU, which controls the entire camera, and a transition from power-off mode to power-on mode is made as necessary to reflect any changes in switch status.
In addition to this, SUB-MCU includes a built-in LCD driver so that various information regarding camera status can be displayed on an external LCD for easy recognition by the user. The content of this display is basically all the data sent by serial communications from MAIN-MCU. Since the received data itself corresponds to which LCD segments are lit and unlit, SUB-MCU does not need to perform decoding or any other operations.

Finally, SUB-MCU controls the backlight LED for the LCD inside the camera's finder and the superimpose LED. Backlight LED control is performed using PWM output for brightness modulation based on commands from MAIN-MCU.
The backlight LED is also turned off when release is recognized. As for the superimpose LED, pulse output is performed for brightness modulation based on commands from MAIN-MCU. SUB-MCU is not directly involved in turning on/off the superimpose LED, as this is controlled by MAIN-MCU.

(6) Main features of the light measurement FPC

1) Finder MCU

Description of basic operations

When the DC-DC converter is started by SUB-MCU, camera power is turned on and the specified power is applied to FD-MCU. A set interval of time after power is applied, SUB-MCU releases the reset status of the reset pin of FD-MCU, and FD-MCU begins operating.

FD-MCU functions to control the 1005-division CCD upon which TTL photographic subject light from the photographic scene is projected and constantly calculate optimum photographic subject brightness for the photographic scene as update data. In this way, proper exposure can be achieved using the appropriate numerical values based on these results when photographic operations are started by a release operation by the photographer. In addition, once photographic subject brightness has been calculated, photographic subject temperature, gamma parameters, and white balance for the photographic scene may also be similarly calculated at the same time. These calculation results are used in the signal processing of the image data obtained through photography.

The results calculated for photographic subject brightness, photographic subject temperature, gamma parameters, and white balance are actually passed periodically to MAIN-MCU via serial communications and used during photographic operations.

If during communications with MAIN-MCU, MAIN-MCU commands a transition to test mode, FD-MCU transits to test mode and performs the operations specified in the data sent from MAIN-MCU. Another operation performed by FD-MCU is to load adjustment values to be executed one time only immediately after power-on.

Immediately after power-on, MAIN-MCU accesses and retrieves adjustment values stored in the EEPROM. MAIN-MCU then transmits these adjustment values to FD-MCU. FD-MCU stores the adjustment values received in RAM and performs subsequent operations.

(7) Compressed recording board

1) Description of operation

Digital data from the CCD is used to read the image and perform image processing with the image processing IC by controlling the RISC microcomputer on this board, and the image data is recorded on the CF card. The board also includes a function which sends that image data through a video controller IC to output a video output signal.

RISC(U101): The microcomputer which controls each IC on the compressed recording board

16MFLASH(U104): Flash memory in which the RISC program is stored.

16-bit 64MEDODRAM: RISC working memory and video memory (U105, U106)

EI-105(U301): Processes digital image data from the CCD. This is also the IC which reads/writes the CF card.

8-bit 64MEDODRAM: Image processing memory for EI-105 control(U302-U309)

Video controller: Accepts digital video data from the RISC and converts into a composite signal and Y/BY/RY signals for output

2) Description of operations

Release (image recording)

After the release command is received by the RISC (U101) from the camera control block via CN102, the RISC (U101) starts reading the image for EI-105 (U301). Then, EI-105 (U301) reads the 12-bit image data sent from CN301 into EDODRAM 8-bit (U302-U309) and performs various types of image processing. After EI-105 (U301) image processing ends, the RISC (U101) is notified, and the RISC (U101) once again controls the CF card control block of EI-105 (U301) in order to record image data on the CF card attached toCN302.

3) Image data playback

After the RISC (U101) receives an image playback command from the camera control block via CN102, the RISC (U101) controls the CF card control block of EI-101 (U301) to temporarily store image data in the 16-bit 64MEDODRAM (U105, U106). That image data is again converted into video image data by the EI-105 (U301) and stored in the video memory area of the 16-bit 64MEDODRAM (U105, U106). After this, image data is sent to the video controller (U110) by the video controller built into the RISC (U101). This video controller (U110) outputs a video signal and Y/BY/RY signals to the TFT control block via CN104.

Note that selection of NTSC and PAL is performed via software control and that hardware is shared.

4) PC I/F (IEEE1394) transfer

The IEEE1394 controller on the PC I/F board is controlled via CN103 for communications with the PC.

5) Crude operations

Power is supplied to this board via CN102. When a RISC (U101) reset signal is input, initialization is performed by a reset configuration circuit consisting of U102 and U111, and the RISC (U101) starts program-based operations by accessing 16MFLASH (U104).

(8) TFT peripheral circuits

Description of basic operations

1) TFT controller circuit

R, G, and B signals are output by inputting a Y color difference signal.

15.5 V, 12.0 V, 4.5 V, and 3.3 V are output by inputting 15.5 V, 5.25 V, or 3.3 V.

The above voltages are output in the order 3.3 V, 4.5 V, 15.5 V or 12.0 V by inputting a supply voltage on signal.

Image is adjusted by using serial transfer to control TFT controller EVR and external EVR.

2) Inverter circuit

An output voltage of 7 V is output by inputting a DC output 5 V to 9.9 V max. signal. (Output voltage is fixed.) DC/DC output is controlled by inputting a backlight on/off signal. Backlight brightness is controlled by inputting an HD signal having a cycle of 63 us and pulse width of 2.0 to 2.8 us.

3) TFT

The specified image is output by inputting R, G and B signals.

(9) Recording format

(Image file format)

1) JPEG compressed files

●Compression method: Conforms to ISO/IEC 10918-1 (JPEG Baseline)

●Image data format: YCbCr4:2:2

●Number of pixels: 2000 (horizontal) x 1312 (vertical)

●File format: Conforms to Exif Version 2.1

- Supplied data: Conforming to the DCF standard, supplied data is recorded in the APP1 Marker Segment.
- Thumbnail image: JPEG compressed data (YCbCr4:2:2, 160x120)
- Various photographic data
- Various management data

2) 2700,000-pixel raw data file

●Image data format: 12-bit Bayer CFA raw data

●Number of pixels: 2012 (horizontal) x 1324 (vertical)

●File format: Conforms to ISO/DIS 12234-2 Part-2: Image data format-TIFF/EP

- Supplied data: Conforming to the TIFF/EP standard, supplied data is recorded in a file in tag format.
- Thumbnail image: Uncompressed data (RGB4:4:4, 160x120)
- Various photographic data
- Various management data

3) RGB uncompressed files

● Image data format: RGB:444

●Number of pixels: 2000 (horizontal) x 1312 (vertical)

●File format: Conforms to Exif Version 2.1

●Supplied data: Conforming to Exif Version 2.1, supplied data is recorded in a file in tag format.

- Thumbnail image: Uncompressed data (RGB4:4:4, 160x120)
- Various photographic data
- Various management data

4) YCbCr uncompressed files

● Image data format: YCbCr:422

● Number of pixels: 2000 (horizontal) x 1312 (vertical)

●File format: Conforms to Exif Version 2.1

●Supplied data: Conforming to Exif Version 2.1, supplied data is recorded in a file in tag format.

- Thumbnail image: Uncompressed data (RGB4:4:4, 160x120)
- Various photographic data
- Various management data

5) File Size

format	Number of Pixels Recorded	Size	Number of Images Recorded*1
JPEG (Basic mode)	2000 x 1312 x 2 x compression ratio	Approx. 328 KB	195
JPEG (Normal mode)		Approx. 656 KB	97
JPEG (Fine mode)		Approx. 1.32 MB	78
TIFF-RGB	2000 x 1312 x 3 *3colors	7.88MB	8
	2000 x 1312 2	5.25MB	12
JPEG (Normal mode)	2012 x 1324 1.5 *Recorded with 12 bit	4.00MB	16

*1: Estimate assumes the use of a 64MB card.

Disassembly

CAUTIONS FOR DISASSEMBLY AND ASSEMBLY ..... D 1

1. External units and image PCBs

Rating plate D1
C/F cover unit ..... D 2
Grip rubber unit ..... D 2
I/F connector blind plate unit ..... D 3
Bottom cover assembly unit ..... D 3
Back door assembly unit ..... D 4
Battery chamber: Roof plate ..... D 4
Cover plate unit ..... D 5
Rear LCD assembly unit ..... D 5
Battery contact assembly unit ..... D 6 ~ D 7
CCD power PCB ..... D 7
TG PCB ..... D 8
CCD bracket unit ..... D 9

2. Top cover unit

Top cover unit ..... D 9 ~ D 1 1

3. Separation of the front body from the rear body .....

Remote terminal unit ..... D 1 1
Disconnecting the connector/Unsoldering the soldering bridge ..... D 1 2
Separation of the front body unit from the camera body ..... D 1 3

4. Rear body

Grip PCB unit ..... D 1 4
TFT drive PCB ..... D 1 5
Film rewind relay FPC ..... D 1 5
★ Main C/D assembly unit ..... D 1 6
Sequence unit ..... D 1 6
Power FPC ..... D 1 7
Shutter assembly unit ..... D 1 7
Other parts ..... D 1 8

5. Front body unit

Removing connectors from the front body unit ..... D 1 8
Unsoldering on the front body unit ..... D 1 9
Diopter adjusting mount ..... D 1 9
★ Main FPC ..... D 2 0

★ Light baffle plate ..... D 2 0
Prism box ..... D 2 0 ~ D 2 2
★ Horizontal AF lever, AF unit ..... D 2 3
★ Bayonet mount, apron ..... D 2 3
★ Attachable lens switch unit, AF/M switch circuit board ..... D 2 3
★ Lens release button unit, lens release base plate ..... D 2 3
★ AF driving unit ..... D 2 3
★ Preview unit ..... D 2 3
★ L I unit ..... D 2 3
★ I base plate, L base plate ..... D 2 3
★ Other small parts ..... D 2 3

6. Top cover unit

★ Front C/D unit ..... D 2 3
★ Release switch unit ..... D 2 3
★ Front C/DFPC unit ..... D 2 3
★ Top cover FPC / film advance mode dial / triple operation buttons ..... D 2 3
★ Other small parts ..... D 2 3

7. Back door unit

Inverter circuit PCB/Indication LCD relay FPC ..... D 2 3 ~ D 2 4
TFT assembly unit ..... D 2 5
Other small parts ..... D 2 5

★ : For disassembly in details, refer to the service manual for F100.

CAUTIONS FOR DISASSEMBLY AND ASSEMBLY

① In disassembly and assembly, carry out the work by using the conductive mat (J5033) and list straps (J5033-5) to protect the electric parts from static electricity.

② The low-pass filter of the image CCD bracket unit is liable to damage. Handle it very carefully.

③ D1 uses many parts common to F100.The chapters of disassembly and assembly in this repair manual describe only the points differenct from F100. Refer to the repair manual of F100 for the points not mentioned in this manual.

④ When disassembling, remember the processed condition of lead wires and FPC, the setting positions and kinds of screws, etc.

⑤ Before disassembling, remove the batteries or the AC power cord.

⑥ In disassembly, a large assembly unit is sometimes removed. If such a large unit must be disassembled furthermore, refer to the exploded drawings.

⑦ The chapters of disassembly and assembly do not mention the waterproof sponge. When covers and others are replaced, refer to the exploded drawings and set a waterproof sponge. For the setting position, refer to the original part to be replaced.

⑧ Some lead wires are adhered with the adhesive (SC608Z). When assembling, adhere the lead wires with the specified adhesive.

⑨ The battery for backup is mounted on the TFT drive PCB. For replacing the battery for backup, accordingly, disassemble the TFT drive PCB as well. Refer to the page A30.

DISASSEMBLY

1. External units and image PCBs

Rating plate

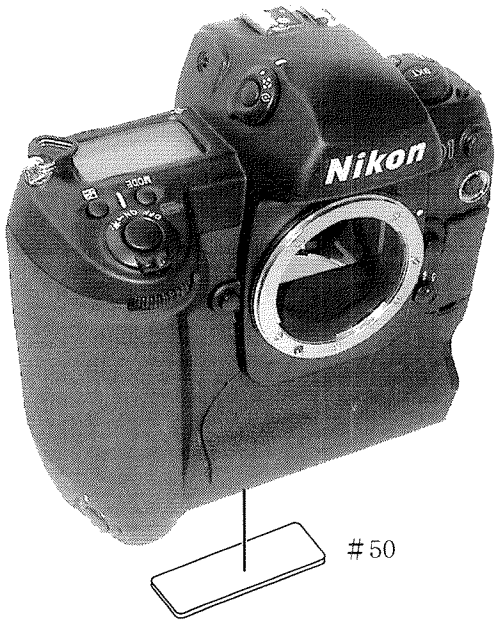

● Remove the rating plate(#50).

C/F cover unit

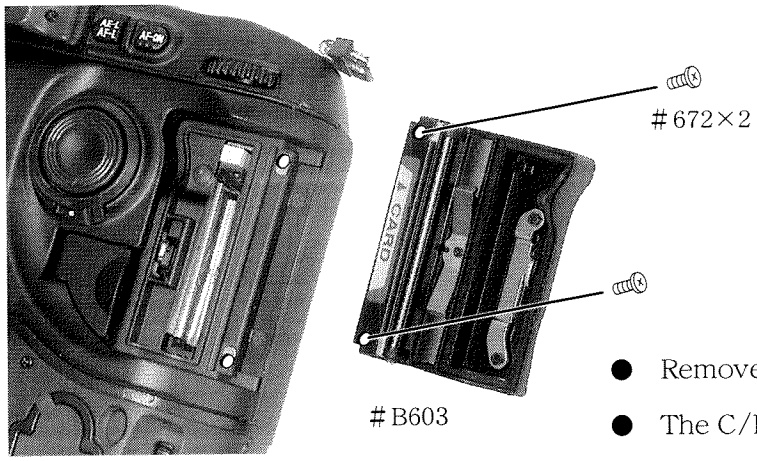

- Remove the two screws (#672).
- The C/F cover unit (#B603) can be removed.

Grip rubber unit

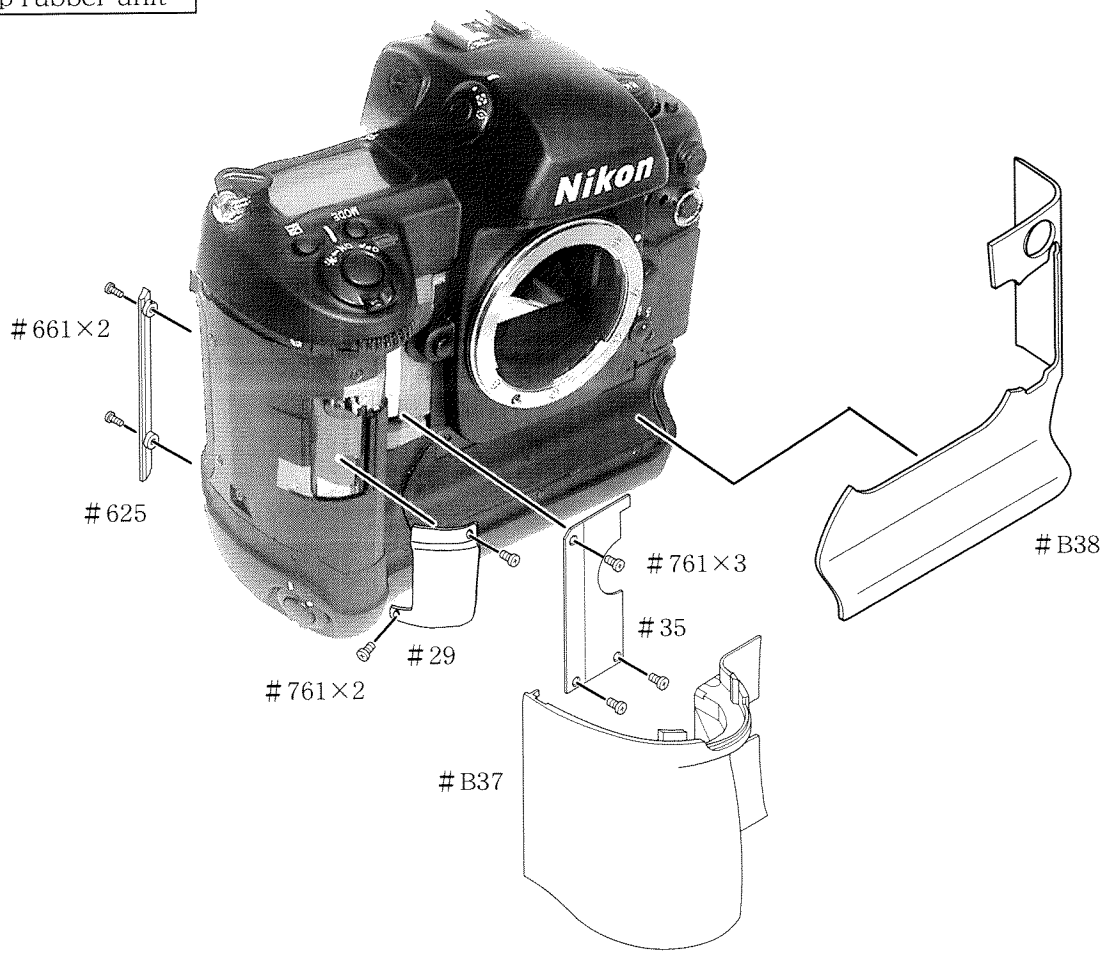

- Remove the two screws (#661) and then remove the grip rubber retainer (#625).
- Remove the grip rubbers (#B38) and (#B37).
- Remove the two screws (#761) and then remove the grip cover (#29).
- Remove the three screws (#761) and then remove the acceptor (#35).

I/F connector blind plate unit

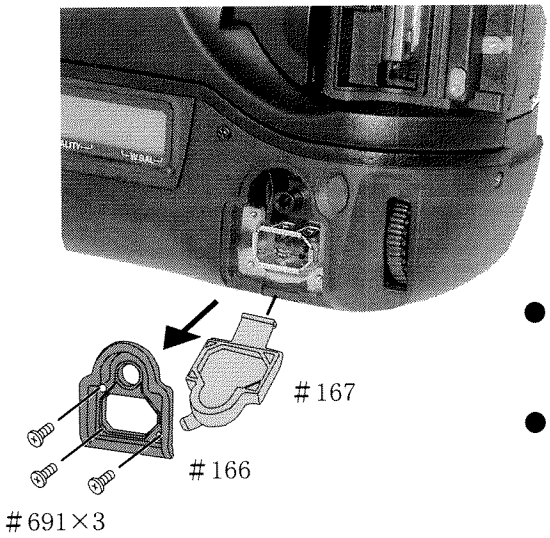

- Remove the three screws (#691) and then remove the blind plate (#166).
- Remove the blind rubber (#167).

Bottom cover assembly unit

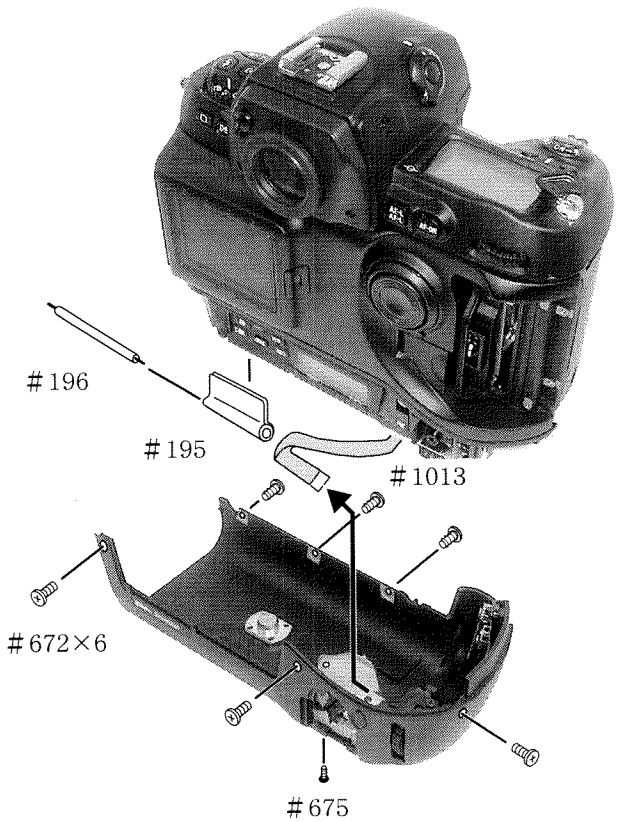

- Remove the six screws (#672) and (#675).
- Remove the bottom cover assembly unit slowly.
- Remove the FPC (#1013) from the connector of the bottom cover.
- Remove the shaft (#196) and LCD cover (#195).

Back door assembly unit

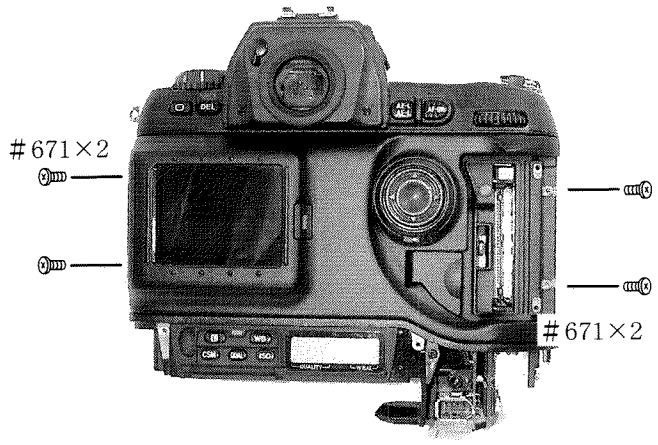

- Remove the four screws (#671).
- Remove the back door assembly unit slowly.
- Remove the FPC (#1024) from the connector.
- Remove the FPC (#B1044) from the connector.

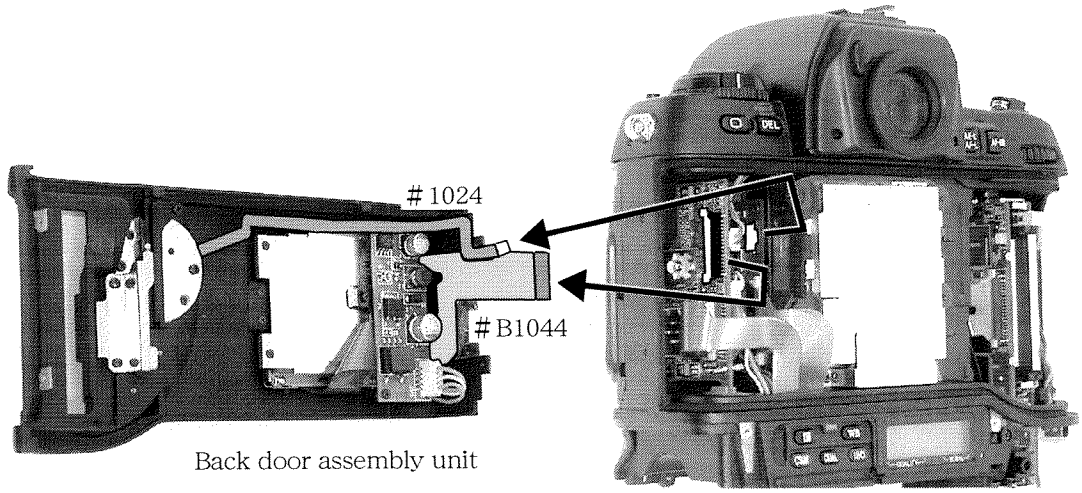

Back door assembly unit

Battery chamber: Roof plate

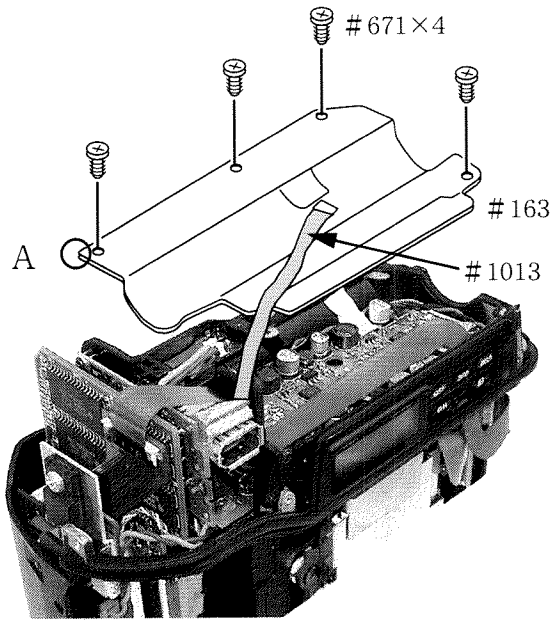

- Remove the four screws (#671).
- Remove the roof plate of the battery chamber (#163).

Note:

Remember the setting position of the unit "A".

Remember the processing of the FPC (#1013).

Cover plate unit

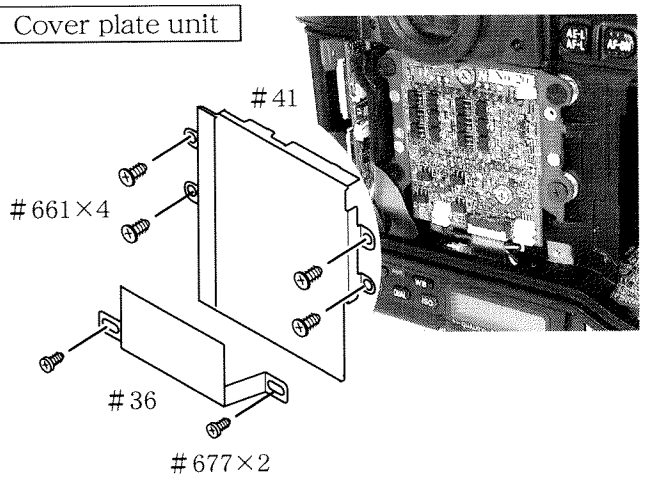

- Remove the two screws (#677).
- The CCD flexible cover plate (#36) can be removed.
- Remove the four screws (#661).
- The cover plate (#41) can be removed.

Rear LCD assembly unit

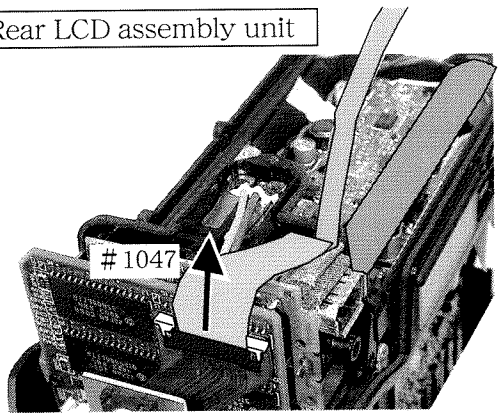

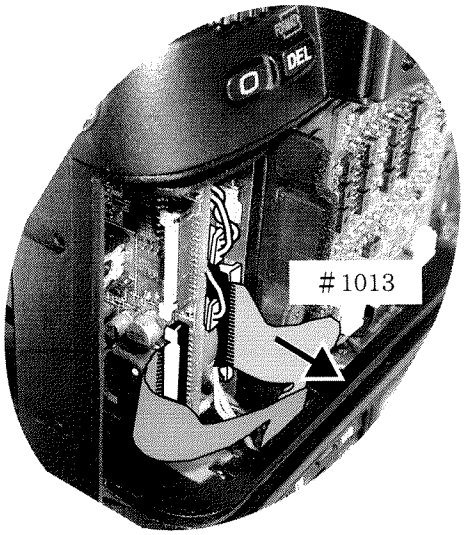

- Remove the FPC (#1047) from the connector.
- Remove the FPC (#1013) from the connector.

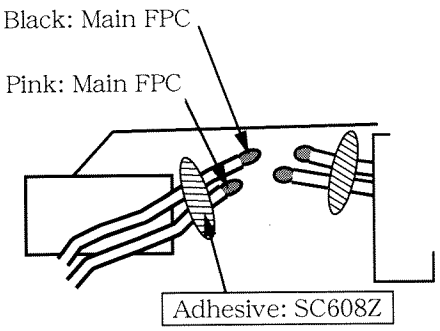

- Remove the adhesive (SC608Z) which retains the pink and black lead wires.
- Unsolder the pink and black lead wires.

- Remove the two screws (#680).
- Remove the rear LCD unit slowly.
- Pull out the FPC (#1013-A) from the hole.
- Pull out the FPC (#1013-B) in the arrow mark direction through the hole.
- Pull out the FPC (#1047) in the arrow mark direction through the hole.

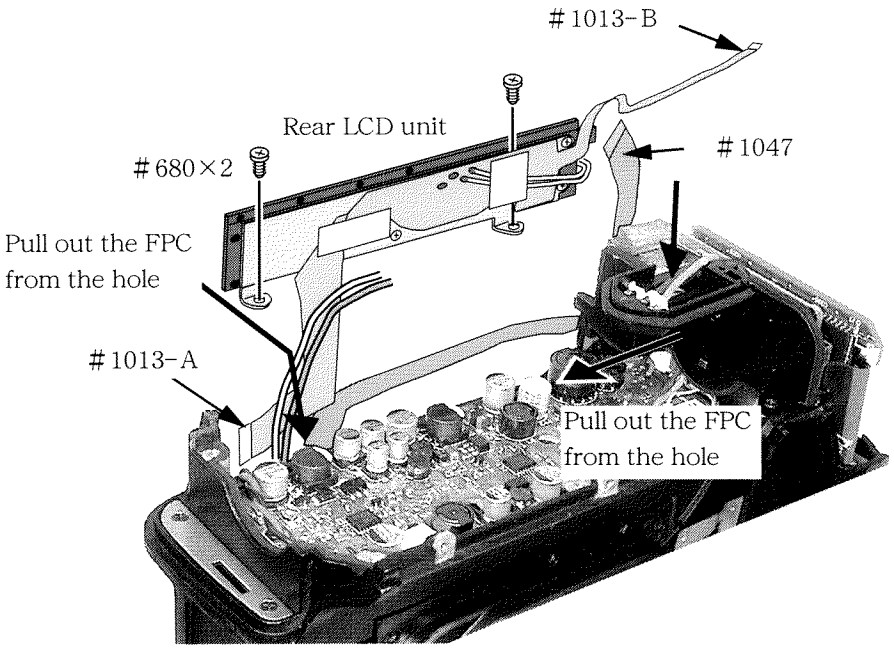

Battery contact assembly unit

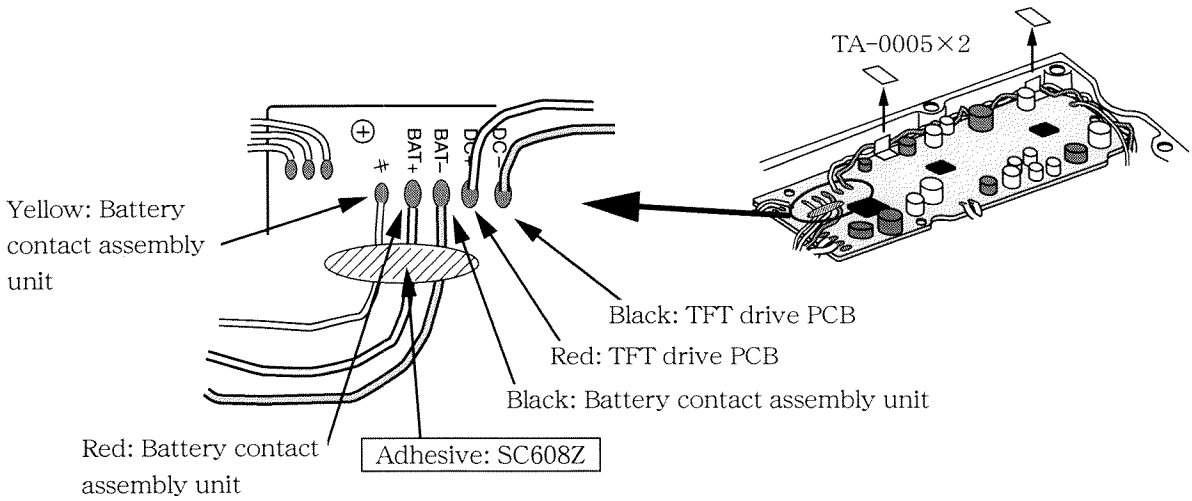

- Remove the adhesive (SC608Z) which retains the red, black and yellow lead wires sent from the battery contact assembly unit.
- Remove the tape (TA-0005) which retains the red and black lead wires sent from the TFT drive PCB.
- Unsolder the red and black lead wires sent from the TFT drive PCB on the CCD power PCB.
- Unsolder the red, black and yellow lead wires sent from the battery contact assembly unit on the CCD power PCB.

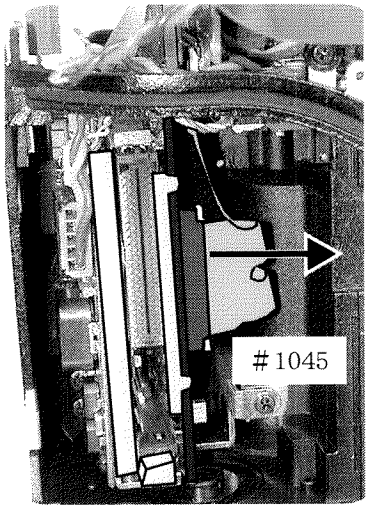

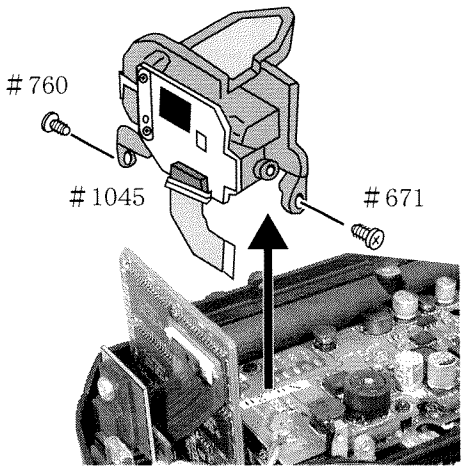

- Remove the FPC (#1045) from the connector.
- Remove the screws (#671) and (#760).
- Remove the battery contact assembly unit.

CCD power PCB

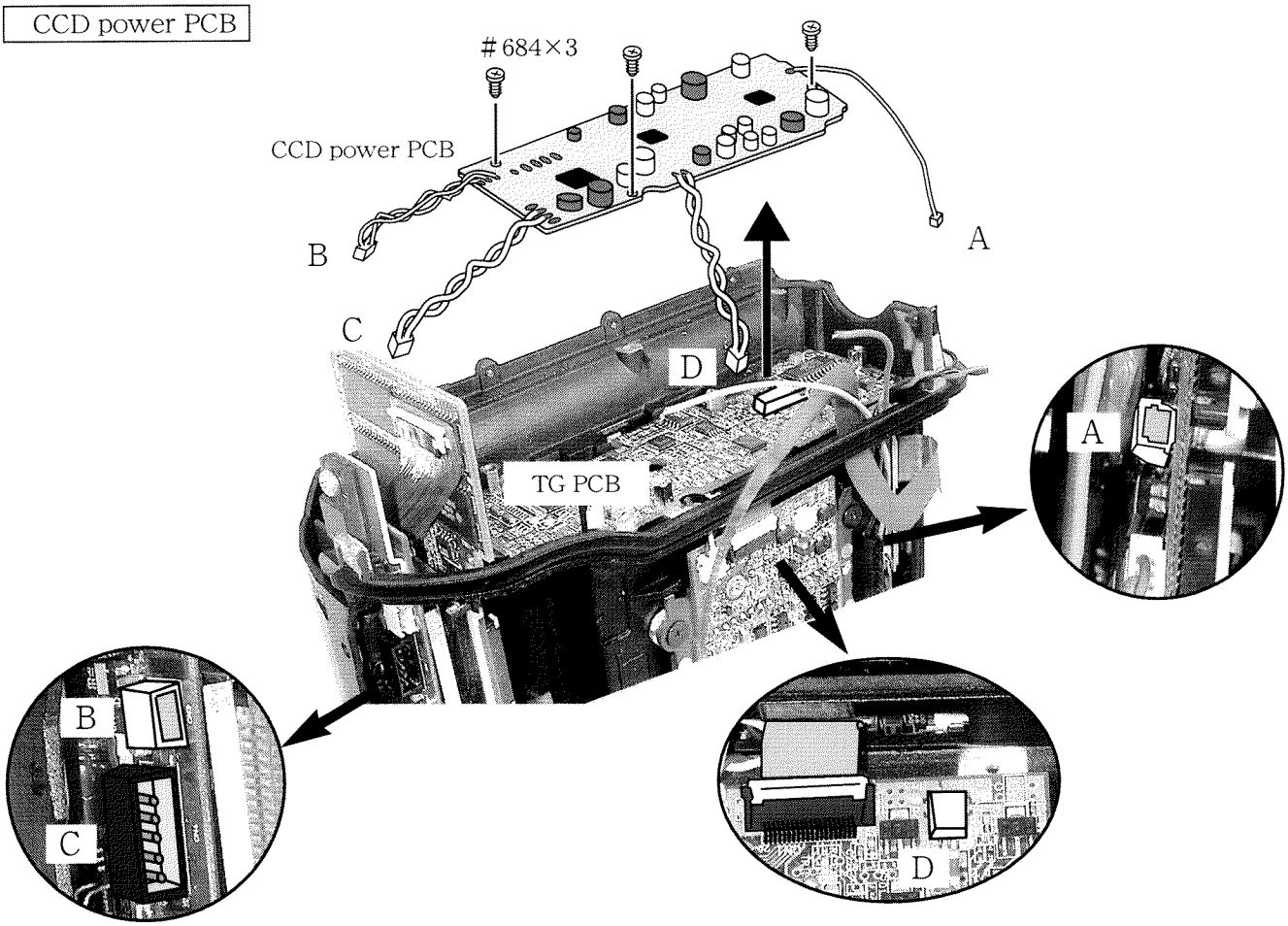

- Remove the lead wire connectors. [A-A] · [B-B] · [C-C] · [D-D]
- Remove the three screws (#684).
- Remove the CCD power PCB. (It is connected to the TG PCB with connectors.)

TG PCB

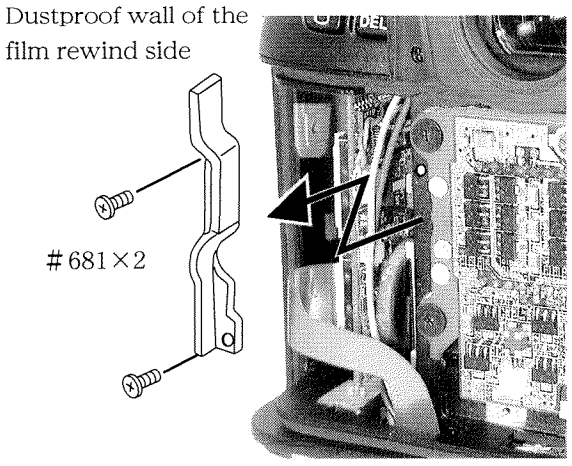

- Remove the two screws (#681).
- Remove the dustproof wall of the film rewind side.

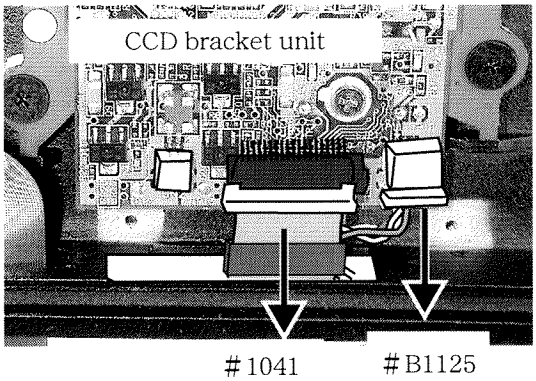

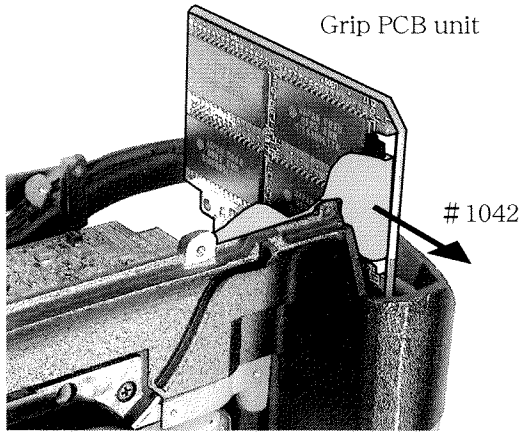

- Remove the FPC (#1041) and the lead wire connector (#B1125) from the CCD bracket unit.
- Remove the FPC (#1042) from the grip PCB unit.

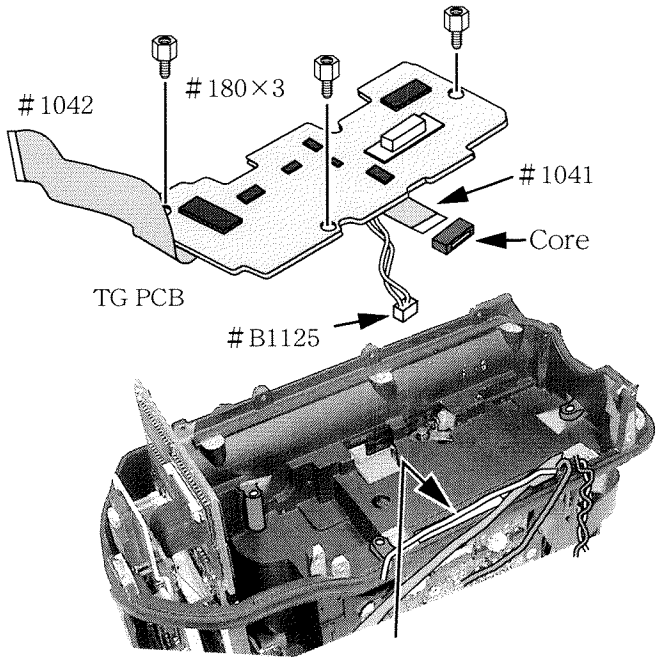

- Remove the three screws (#180) with the tool (T93003).
- Remove the TG PCB.
  Pull out the FPC (#1041) and the lead wire connector (#B1125) from the hole.
- The core can be removed.

Pull out the FPC and code connector from the hole.

CCD bracket unit

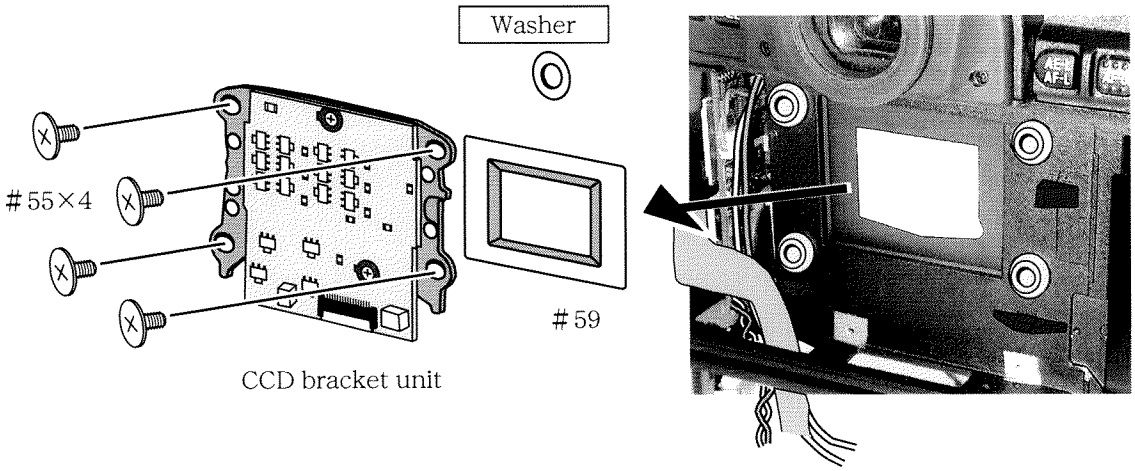

- Remove the four screws (#55).
- Remove the CCD bracket unit.

Note:

A washer is sometimes put in one of the four places on the setting surface of the CCD bracket unit. If a washer is used, put it into the original place when assembling.

- Remove the mask (#59).
- Pull out the following lead wires and FPC from the hole: the red and black lead wires sent from the TFT drive PCB, the FPC and the pink and black lead wires sent from the main FPC

Note:Handle the CCD bracket unit very carefully.

2. Top cover unit

Top cover unit

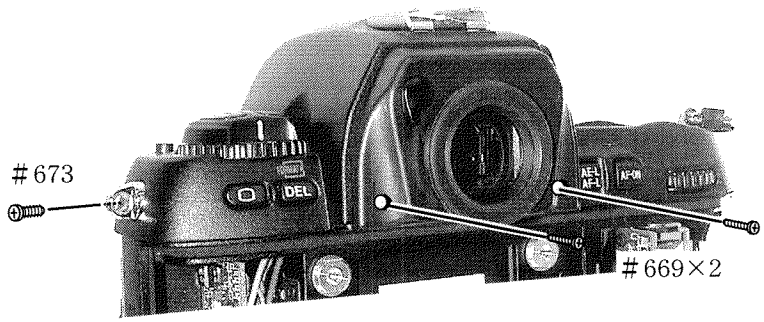

- Remove the two screws (#669).
- Remove the screw (#673).

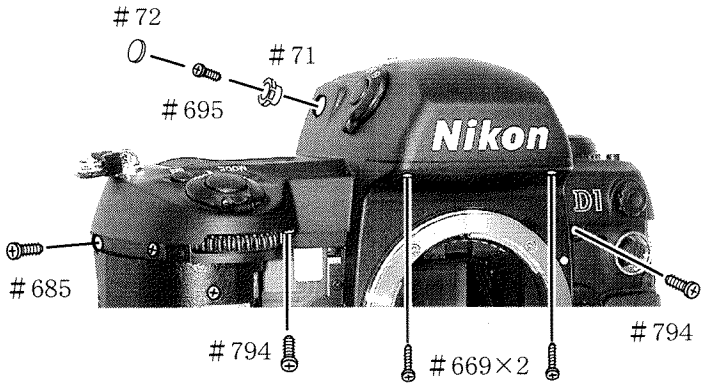

- Remove the diopter adjusting knob (#72).
- Remove the screw (#695).
- Remove the diopter adjusting dial (#71).
- Remove the two screws (#669).
- Remove the two screws (#794).
- Remove the screw (#685).

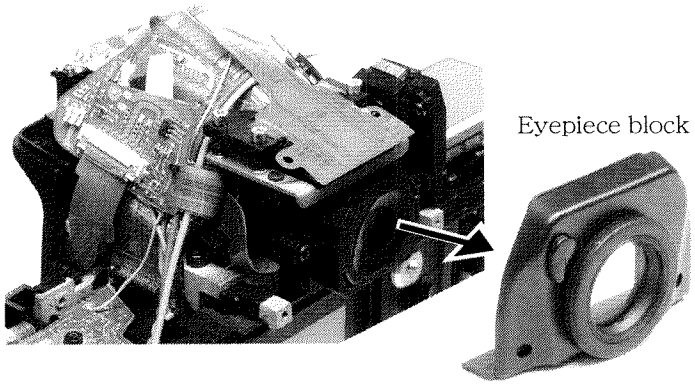

- Lift up the top cover unit slowly and then remove the eyepiece block unit.

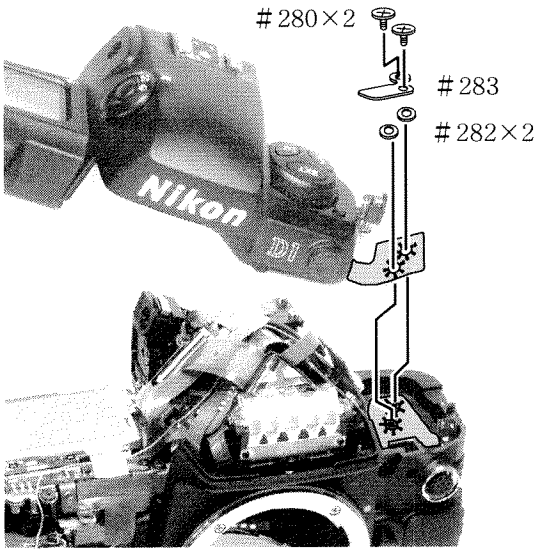

- Remove the two screws (#280).
- Remove the press-contact plate (#283).
- Remove the two press-contact rubbers B(#282).
- The top cover unit can be removed.

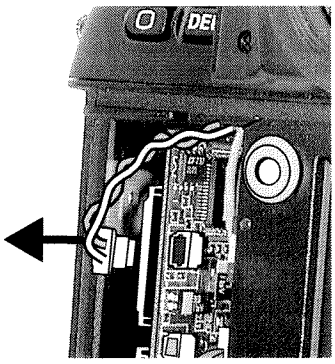

- Remove the red and blue lead wire connector.

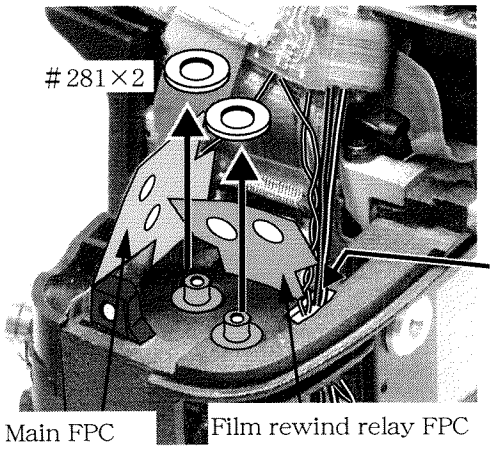

- Remove the two press-contact rubbers A (#281).
- Pull out the four lead wires.

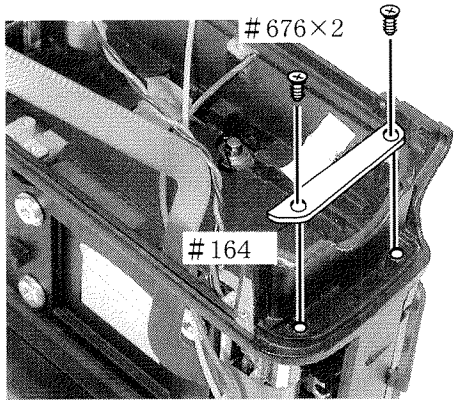

- Remove the two screws (#676).
- The battery P remove plate (#164) can be removed.

3. Separation of the front body from the rear body

Remote terminal unit

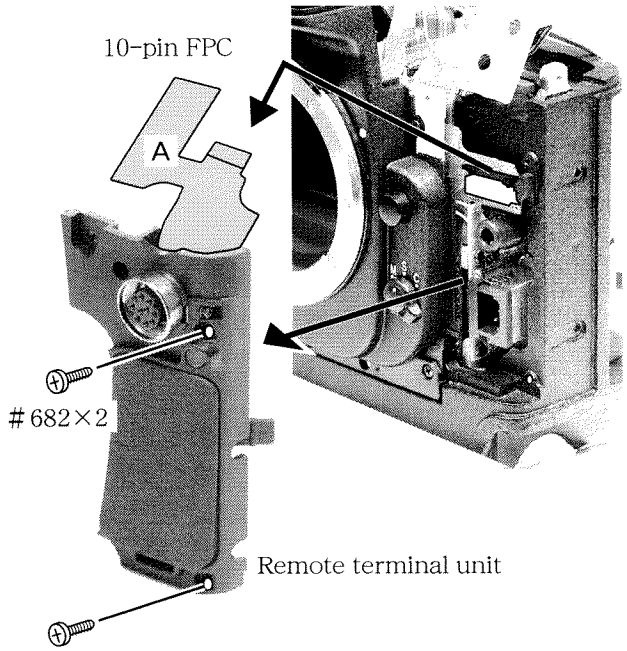

- Remove the two screws (#682).
- Remove the remote terminal unit slowly.
- Pull out the unit "A" of the 10-pin FPC from the front body.
- Remove the 10-pin FPC from the connector.

Disconnecting the connector/Unsoldering the soldering bridge

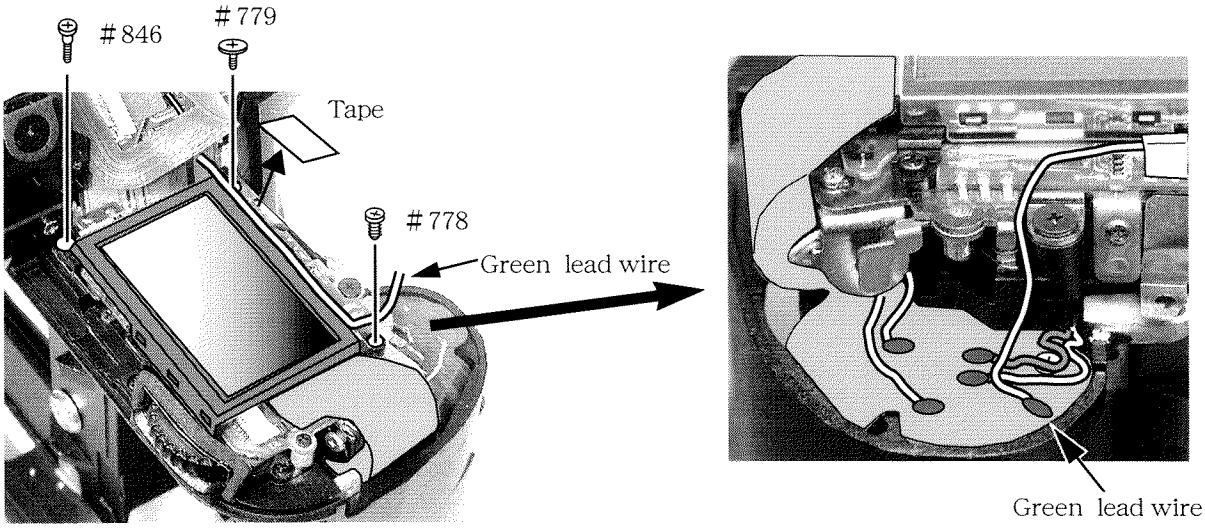

- Remove the tape (TA-0005).
- Unsolder the green lead wire..
- Remove the screws (#846), (#779) and (#778).

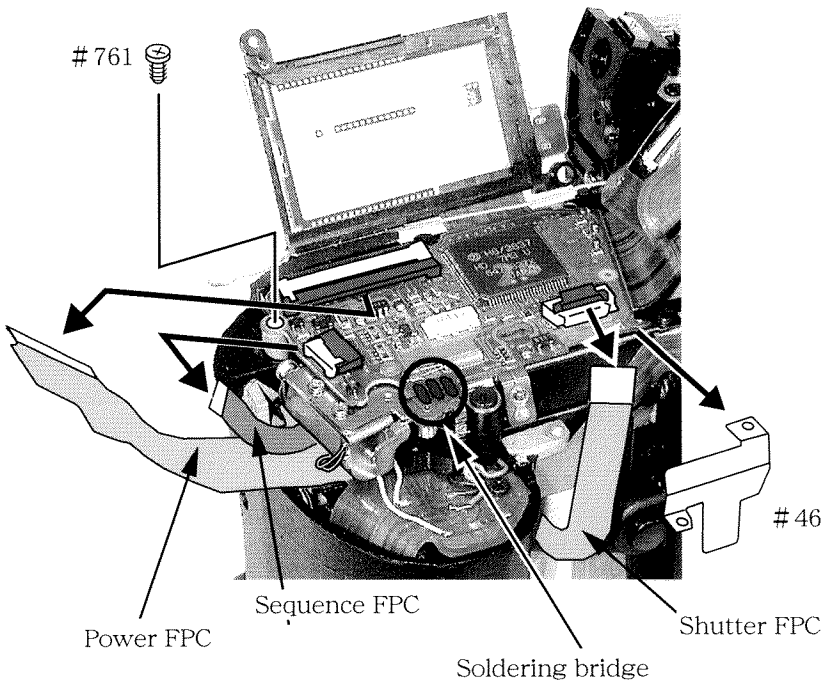

- Remove the screw (#761).
- Remove the FPCs from the connector
- Unsolder the soldering bridge.
- Remove the sequence PCB continuity plate (#46).

Separation of the front body unit from the camera body

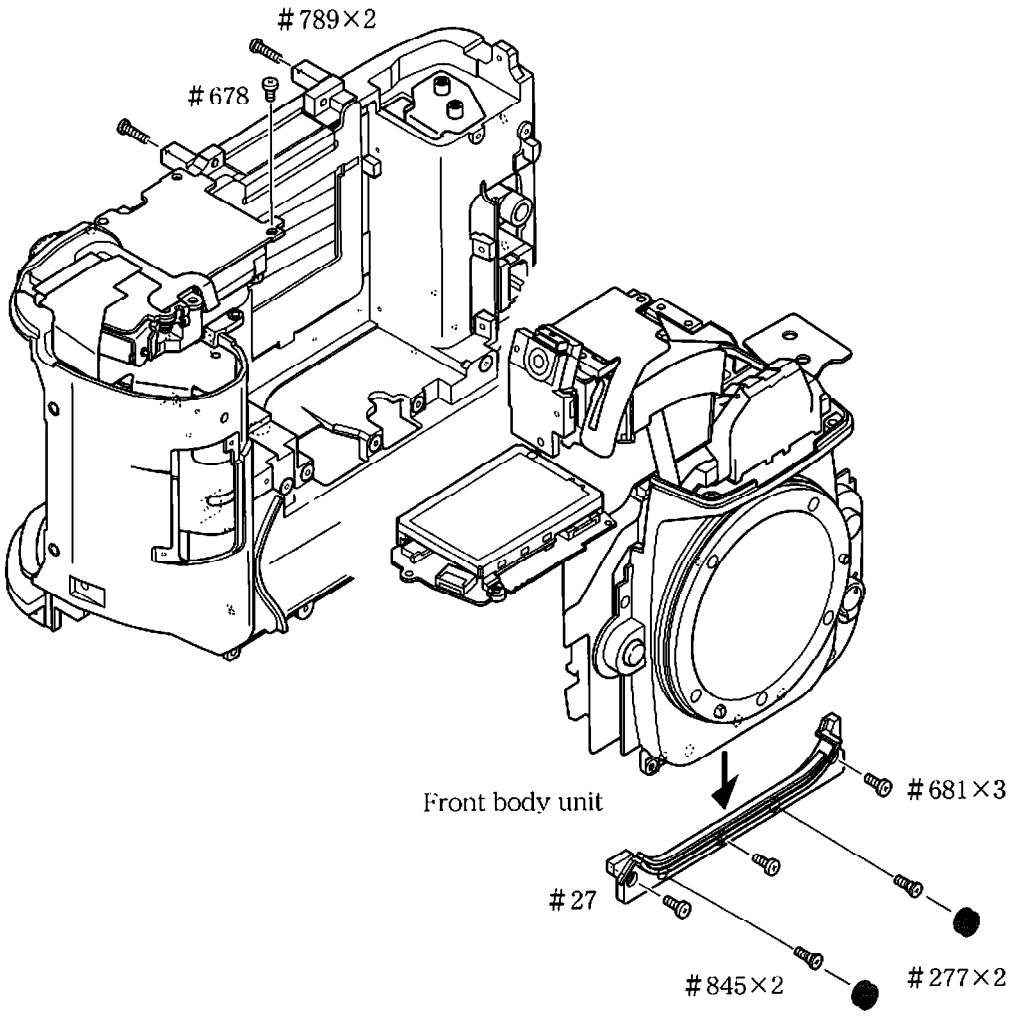

- Remove the two sponges (#277).
- Remove the two screws (#845).
- Remove the two screws (#789).
- Remove the three screws (#681).
- Remove the screw (#678).
- Separate the front body unit from the camera body.
- The apron lower cover (#27) can be removed from the front body unit.

4. Rear body

Grip PCB unit

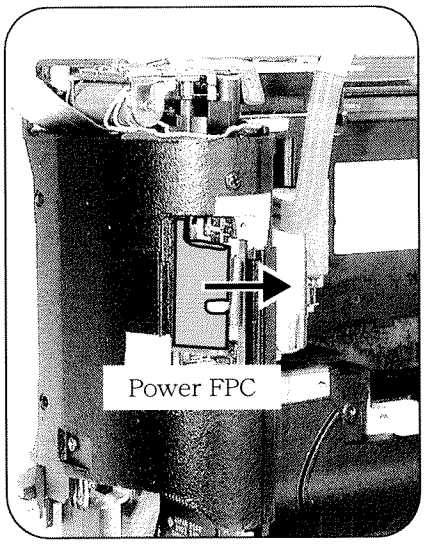

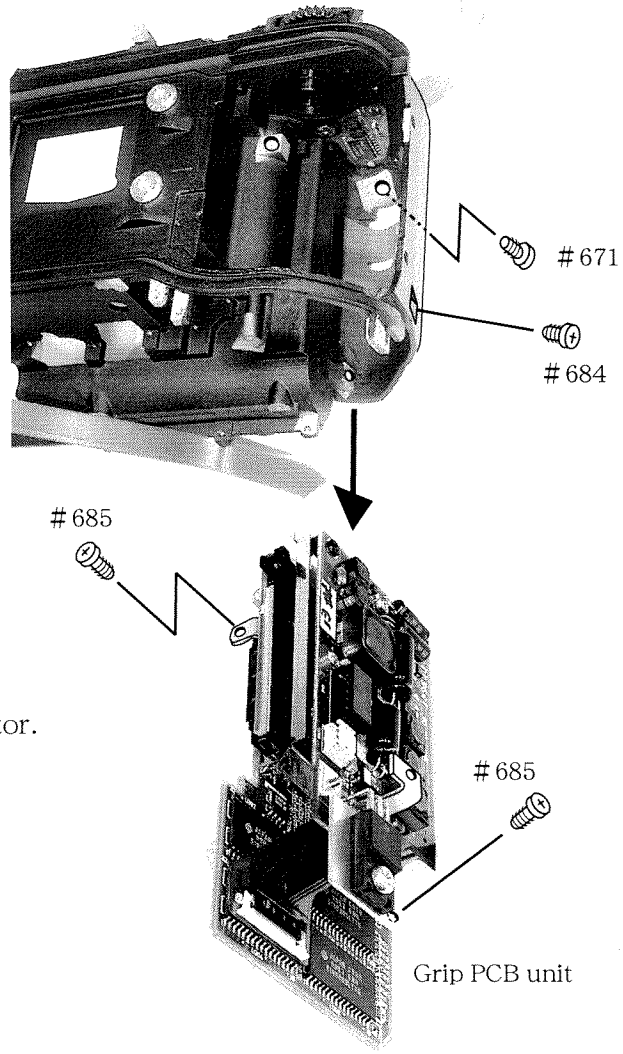

- Remove the power FPC from the connector.
- Remove the two screws (#685).
- Remove the screw (#684).
- Remove the screw (#671).
- Remove the grip PCB unit.

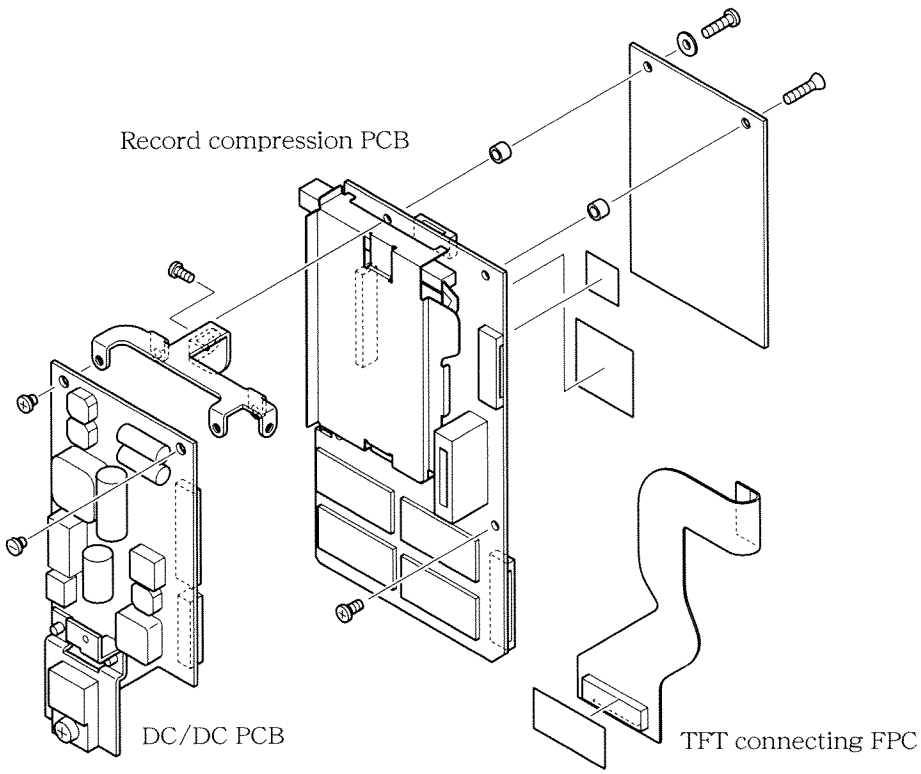

TFT drive PCB

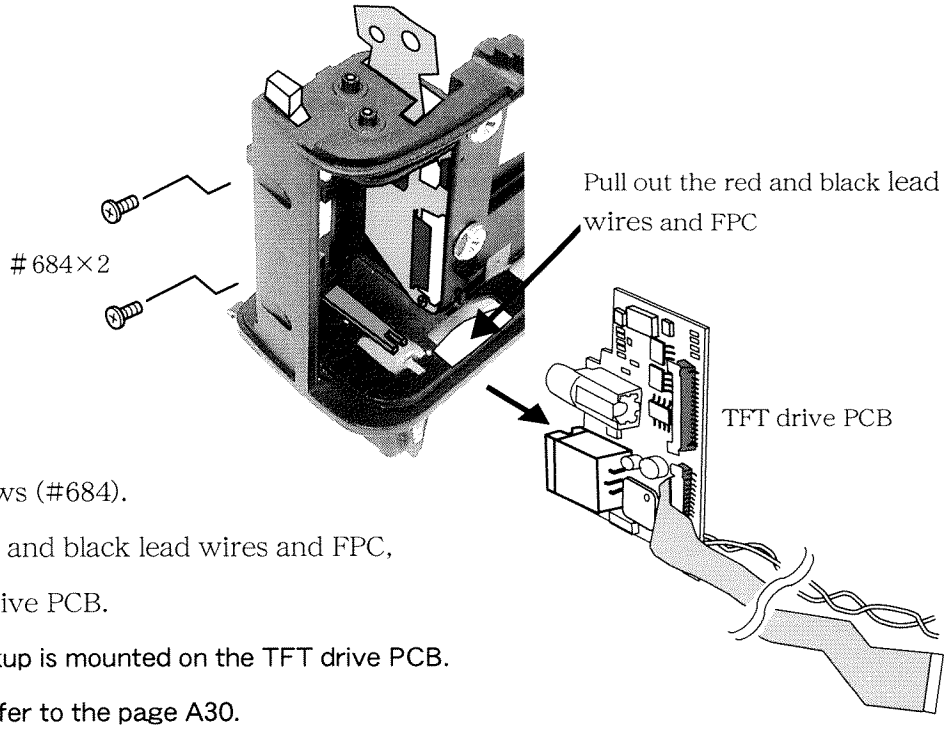

- Remove the two screws (#684).
- As pulling out the red and black lead wires and FPC, remove the TFT drive PCB.

Note : The battery for backup is mounted on the TFT drive PCB.
For replacement, refer to the page A30.

Film rewind relay FPC

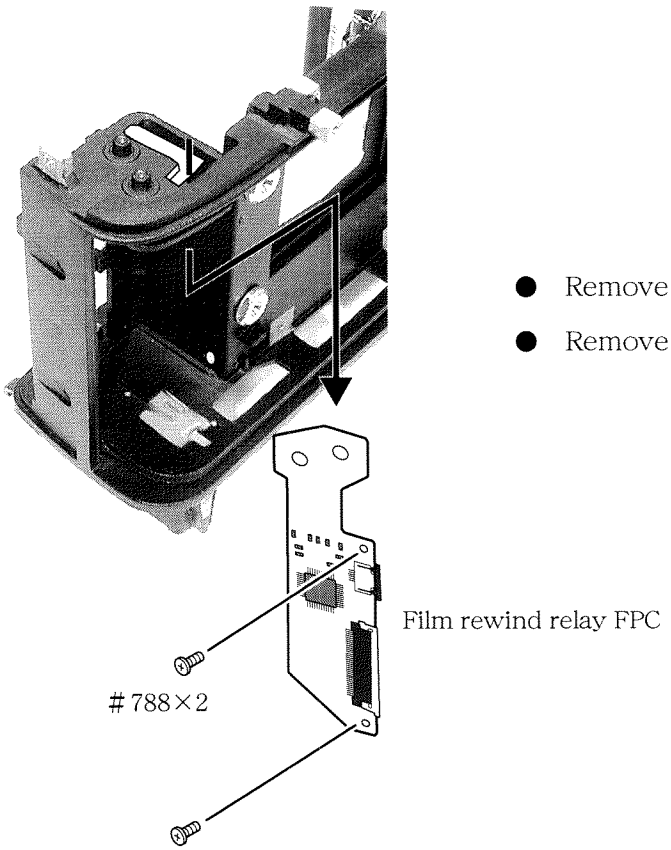

- Remove the two screws (#788).
- Remove the film rewind relay FPC.

Main C/D assembly unit

Sequence unit

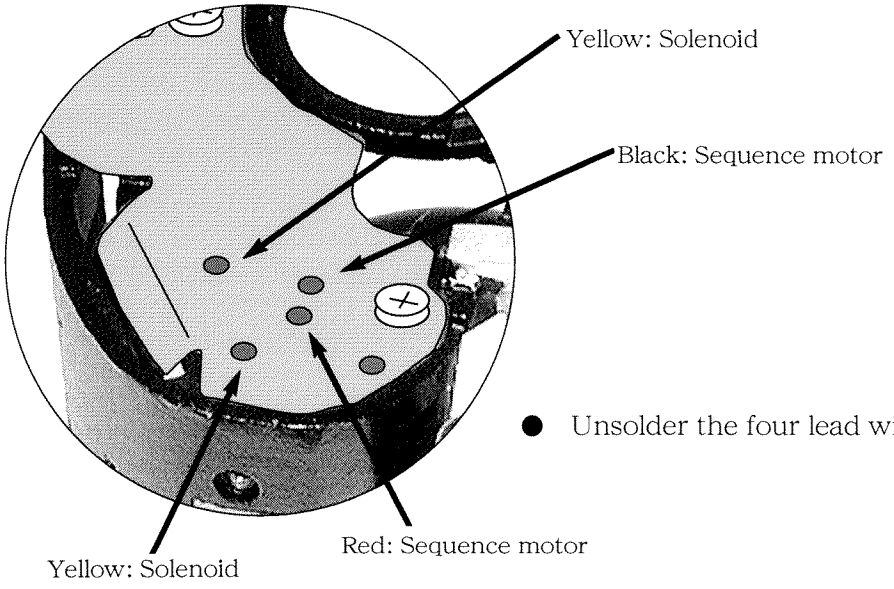

- Unsolder the four lead wires on the power FPC.

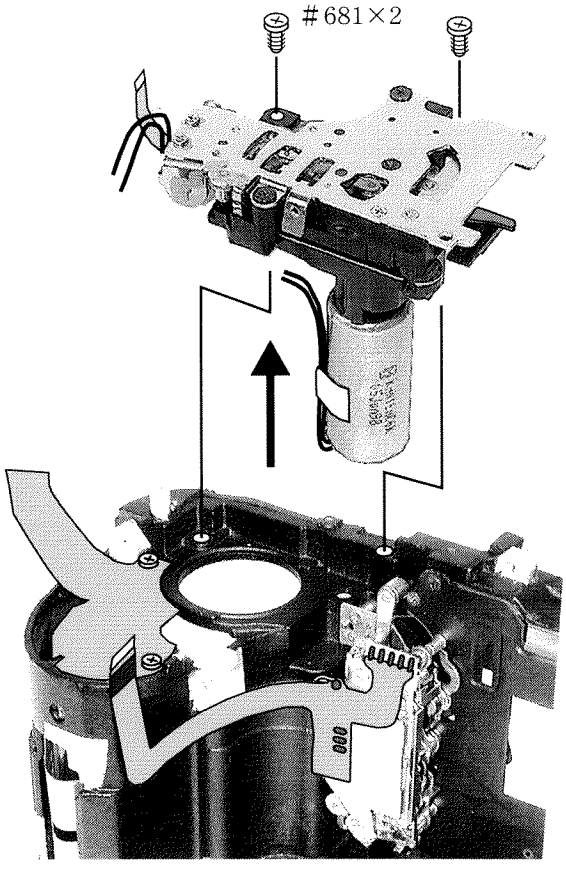

- Remove the two screws (#681).
- Remove the sequence PCB.

Power FPC

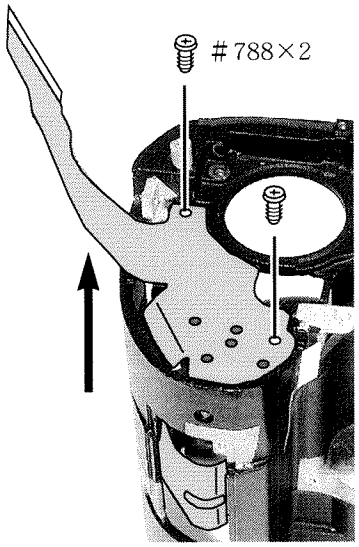

- Remove the two screws (#788).
- Remove the power FPC.

Shutter assembly unit

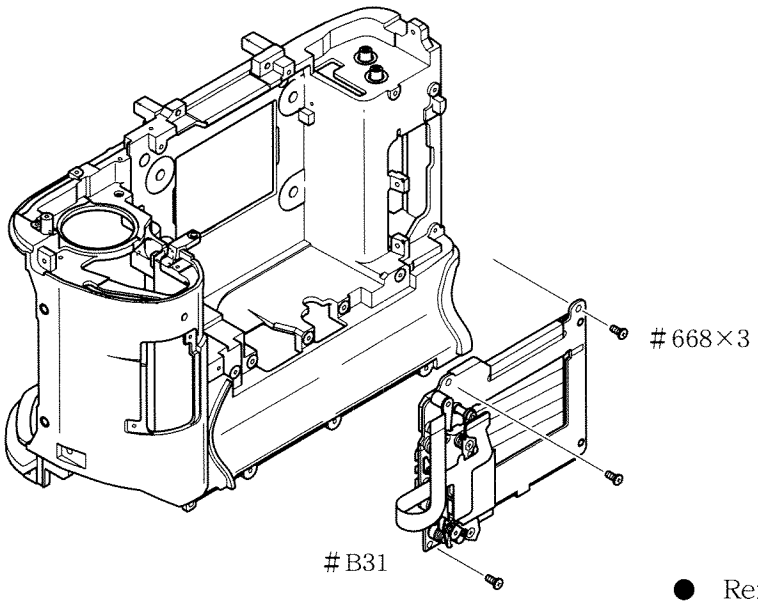

- Remove the three screws (#668).
- Remove the shutter unit (#B31).

Other parts

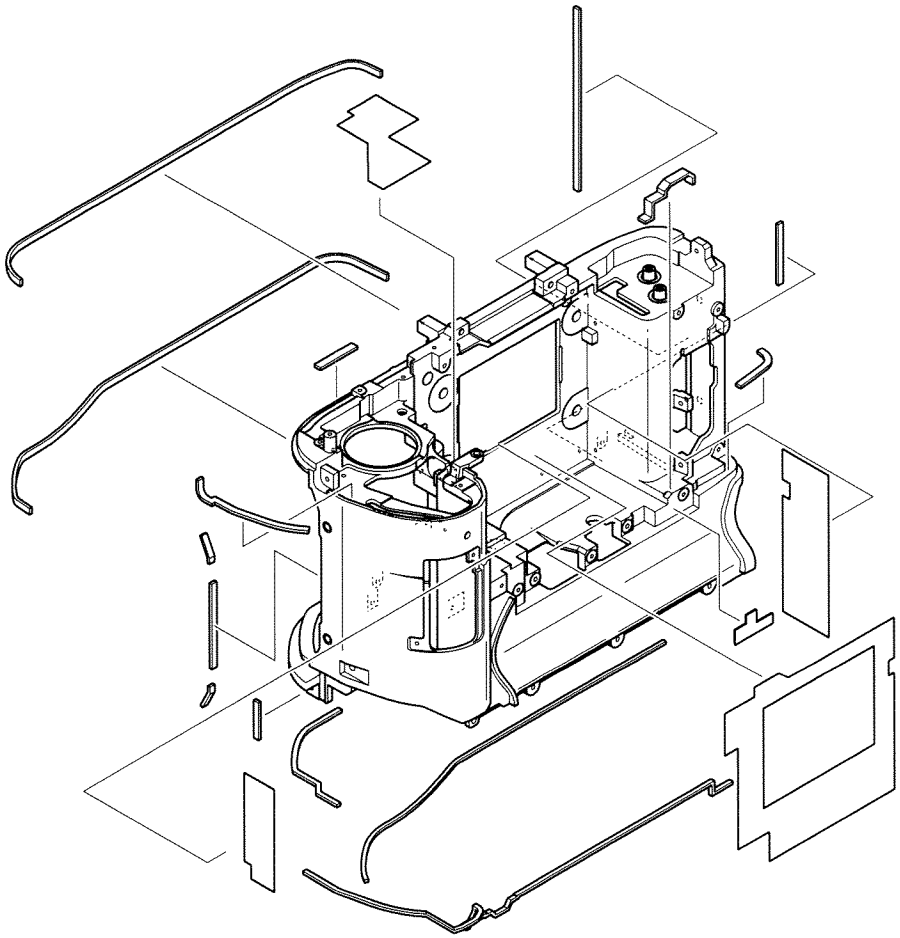

5. Front body unit

Removing connectors from the front body unit

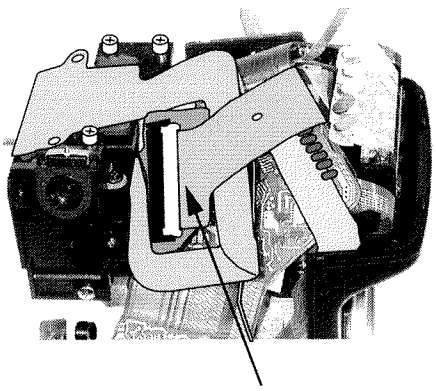

Connector

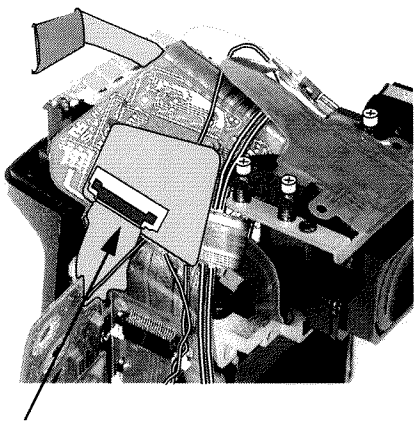

Connector

- Remove the FPCs from the connectors.

Unsoldering on the front body unit

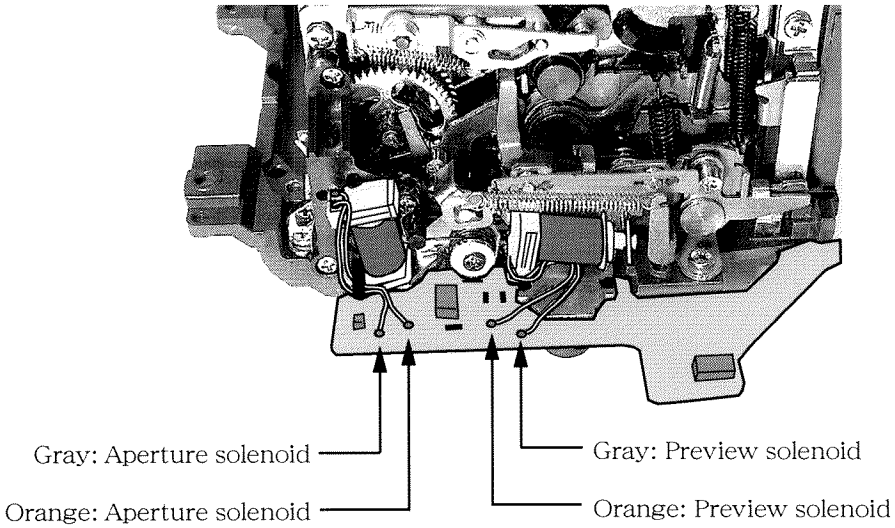

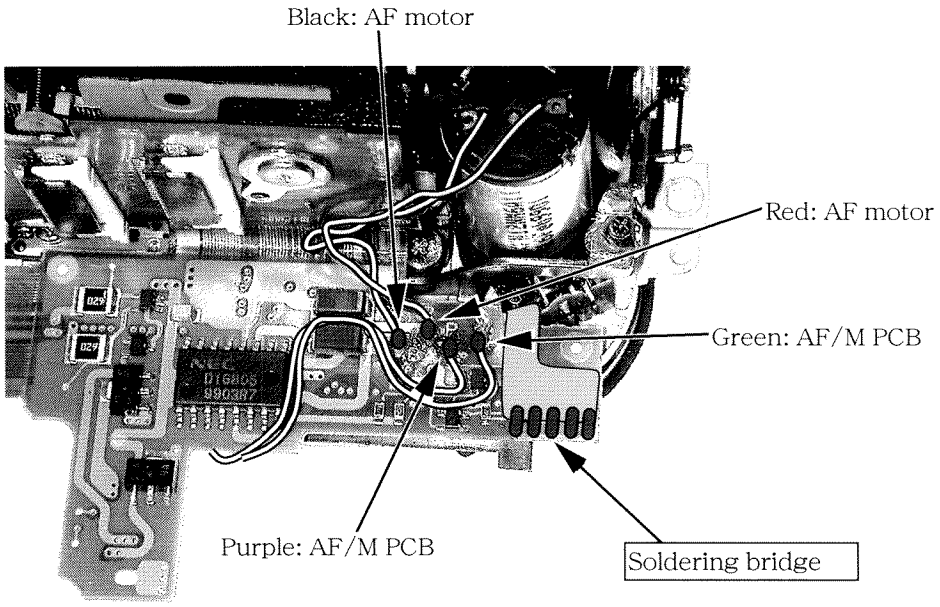

- Unsolder the lead wires and soldering bridges.

Diopter adjusting mount

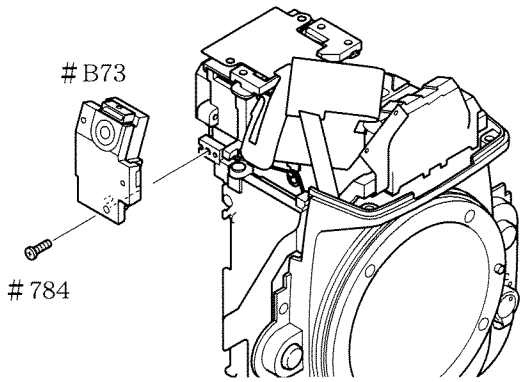

- Remove the screw (#784).
- Remove the diopter adjusting mount (#B73).

Main FPC → Light baffle plate

Prism box

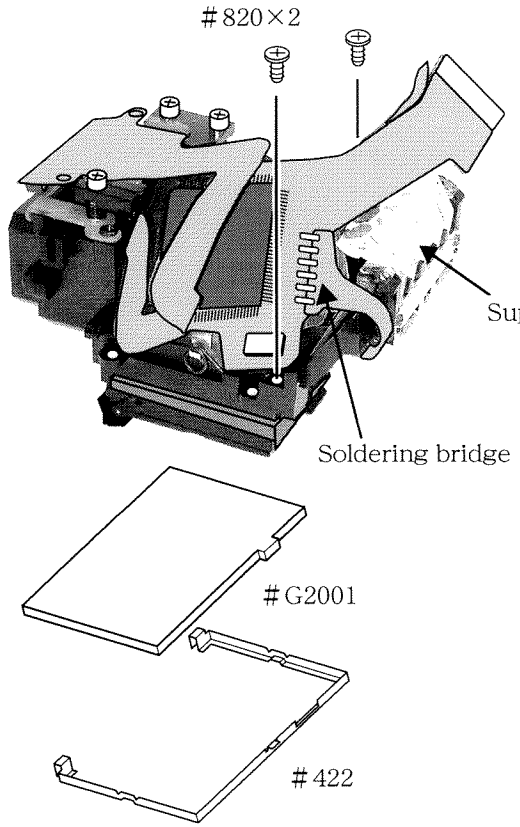

- Unsolder the soldering bridge.
- Remove the two screws (#820).
- Remove the superimpose assembly unit.
- Remove the screen (#G2001).
- Remove the screen frame (#422).

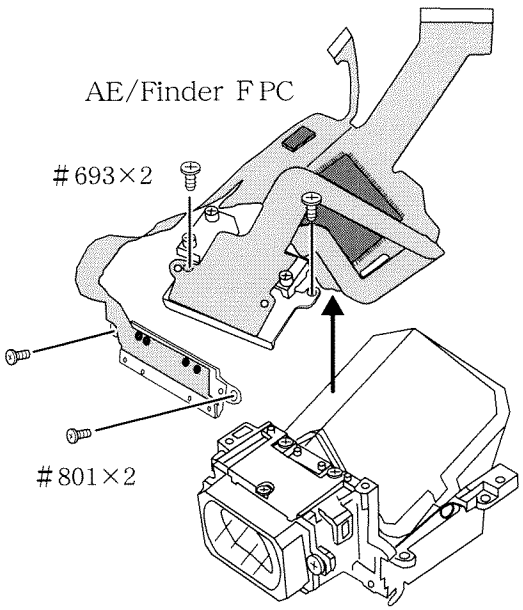

※: If unnecessary to replace the AE/Finder FPC

- Remove the two screws (#801).
- Remove the internal LCD unit from the prism box.
- Remove the two screws (#693).
- Remove the AE/Finder FPC.

  The AE/Finder FPC is adhered with the double adhesive tape.

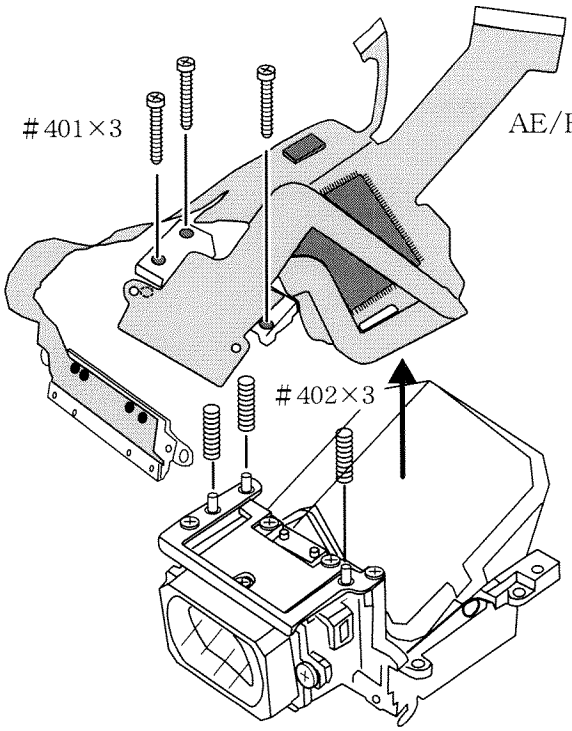

※ When you hope to replace the AE/Finder FPC:

- Remove the three screws (#401).
- The three springs (#402) can be removed.

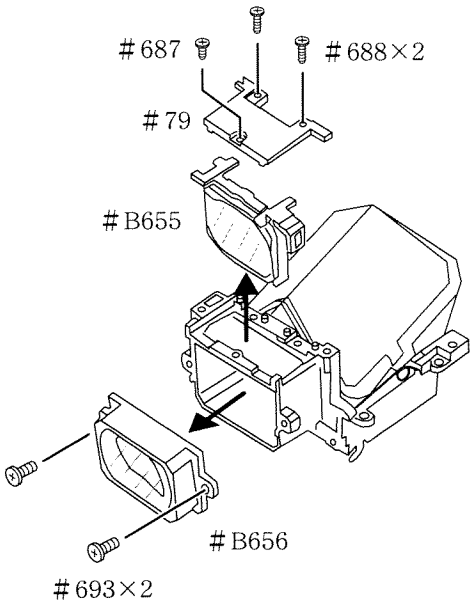

- Remove the two screws (#693).
- Remove the eyepiece lens frame unit (#B656).
- Remove the two screws (#688) and the screw (#687).
- Remove the roof plate (#79) of the eyepiece unit.
- Remove the diopter movable lens (#B655).

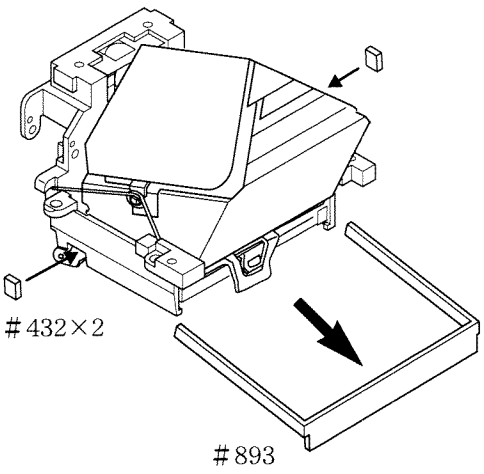

- Remove the sponge (#893).
- Remove the two sponges (#432).

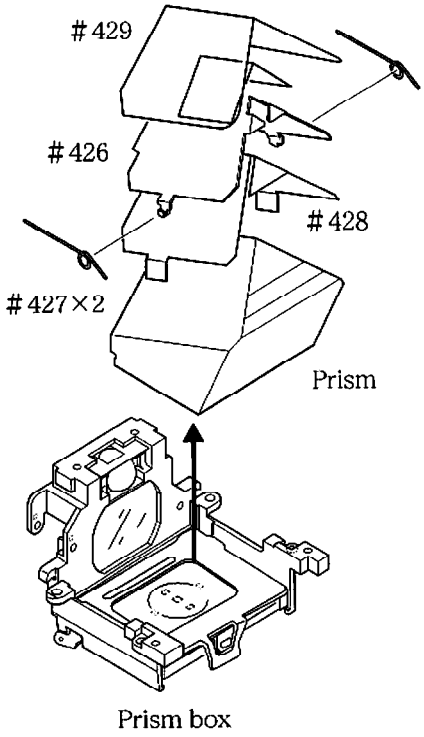

- Remove the two pentaprism retainer springs (#427).
- Remove the pentaprism retainer plate (#426) and pentaprism retainer insulating sheet (#429).
- Remove the pentaprism retainer sheet (#428).
- Remove the prism.

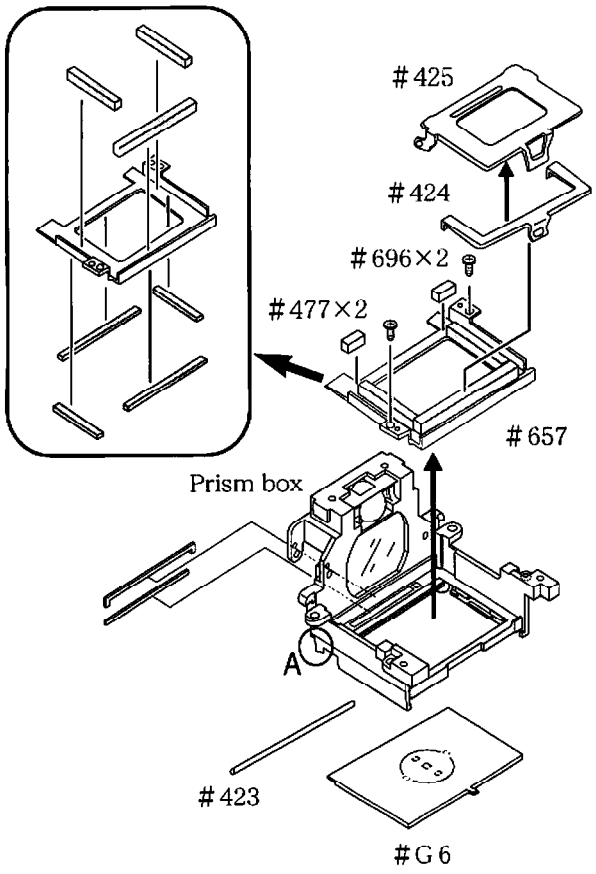

- Remove the adhesive, Super X, which is applied to the right and left of the unit "A".
- Remove the screen frame indication shaft (#423).
- Remove the SI indication plate (#G6).
- Remove the finder field frame (#425).
- Remove the superimpose frame (#424).
- Remove the two sponges (#477).
- Remove the two screws (#696).
- Remove the reference frame (#657).

Horizontal AF lever, AF unit → Bayonet mount, apron

Attachable lens switch unit, AF/M switch circuit board → Lens release button unit, lens release base plate

AF driving unit → Preview unit → L I unit

I base plate, L base plate → Other small parts

6. Top cover unit

Note:The top cover unit of D1 is not equipped with the eyepiece unit.

Front C/D unit → Release switch unit → Front C/DFPC unit

Top cover FPC / film advance mode dial / triple operation buttons → Other small parts

7. Back door unit

Inverter circuit PCB/Indication LCD relay FPC

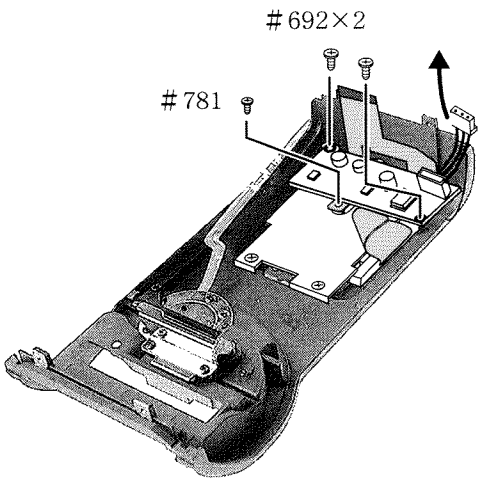

- Remove the lead wire connector of the TFT assembly unit from the connector of the inverter circuit PCB.
- Remove the screw (#781).
- Remove the two screws (#692).

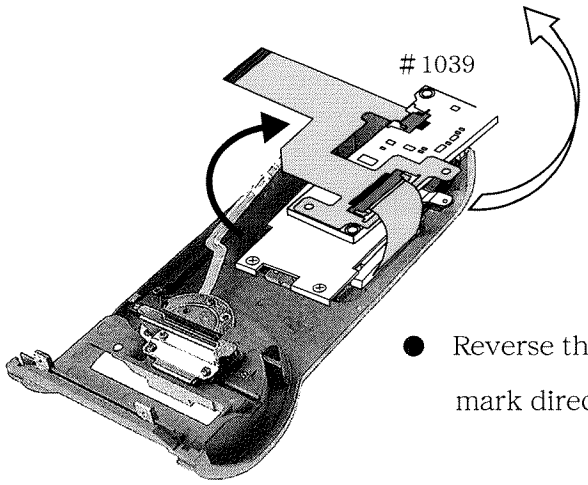

- Reverse the inverter circuit PCB (#1039) in the white arrow mark direction and then turn it in 90° counterclockwise.

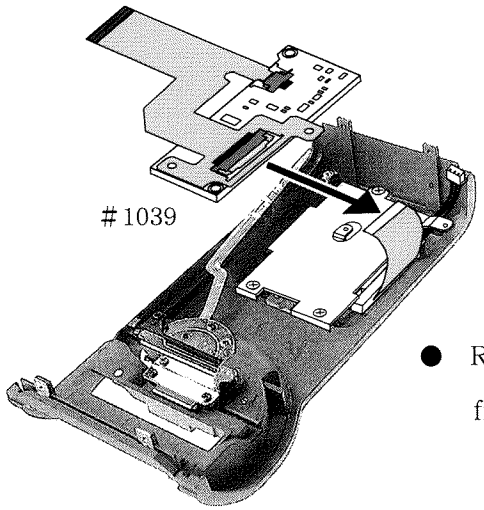

- Remove the connector of the inverter circuit PCB (#1039) from the FPC of the TFT assembly unit.

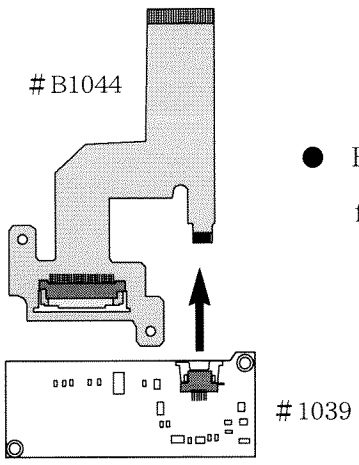

- Remove the connector of the inverter circuit PCB (#1039) from the FPC of the TFT assembly unit.

TFT assembly unit

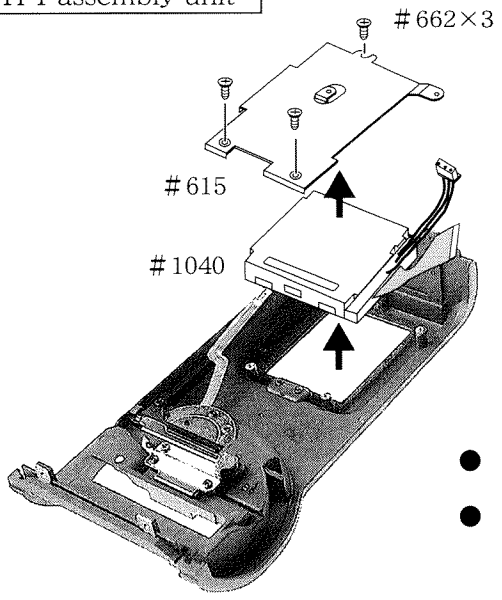

Back door body

- Remove the three screws (#662).
- Remove the TFT assembly unit (#1040) and TFT retainer (#615).

Other small parts

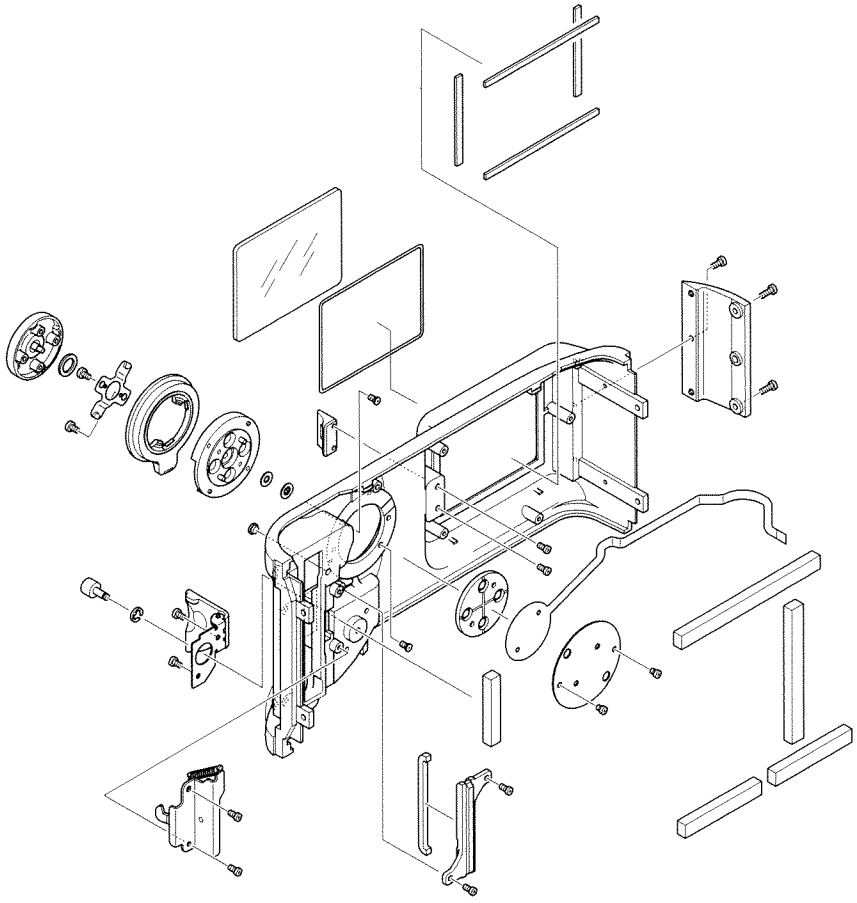

Assembly and adjustment

1. Back door unit

Other small parts ..... A 1

TFT assembly unit ..... A 1

Inverter circuit PCB/Indication LCD relay FPC ..... A 2 ~ A 3

2. Top cover unit

★ Other small parts ..... A 3

★ Top cover FPC / film advance mode dial / triple operation buttons ..... A 3

★ Front C/DFPC unit ..... A 3

★ Release switch unit ..... A 3

★ Front C/D unit ..... A 3

3. Front body

★ Other small parts ..... A 3

★ I base plate, L base plate ..... A 3

★ How to adhere the main mirror ..... A 3

★ L I unit ..... A 3

★ Preview unit ..... A 3

★ AF driving unit ..... A 3

★ Lens release button unit, lens release base plate ..... A 3

★ Attachable lens switch unit, AF/M switch circuit board ..... A 3

★ Bayonet mount, apron ..... A 3

★ Horizontal AF lever, AF unit ..... A 3

★ Height adjustment for the AF coupling ..... A 3

★ Height adjustment for the aperture lever ..... A 3

Prism box ..... A 4 ~ A 6

★ Angle adjustment of main mirror and sub mirror to 45° A7

★ Adjustment for the infinity alignment ..... A 7

★ Light baffle plate ..... A 7

★ Main FPC ..... A 7

Diopter adjusting mount ..... A 7

Soldering the front body unit ..... A 7

Connecting the connectors of the front body unit ..... A 8

4. Rear body

Other parts ..... A 8

Shutter assembly unit ..... A 9

Power FPC ..... A 9

Sequence unit ..... A 1 0
Soldering the power FPC ..... A 1 0
★ Main C/D assembly unit ..... A 1 1
Film rewind relay FPC ..... A 1 1
TFT drive PCB ..... A 1 1
Grip PCB unit ..... A 1 2

5. Mounting and fixing the front body on to the rear body

Fixing the front body to the rear body ..... A 1 3
Adjustment for the bodyback ..... A 1 4
Connecting the connectors/Soldering the soldering bridge ..... A 1 5
Remote terminal unit ..... A 1 6

6. External units and image PCBs

Top cover unit-1 ..... A 1 6
Check and adjustment of alignment for AE 1005 sensor ..... A 1 7 ~ A 1 8
Top cover unit-2 ..... A 1 9
Adjustment through PC for camera body ..... A 2 0
CCD bracket unit ..... A 2 1
TG PCB ..... A 2 2
CCD power PCB ..... A 2 3
Battery contact assembly unit ..... A 2 3
Rear LCD assembly unit ..... A 2 4
Cover plate unit ..... A 2 5
Battery chamber: Roof plate ..... A 2 5
Back door unit ..... A 2 6
Bottom cover assembly unit ..... A 2 6
I/F connector blind plate unit ..... A 2 7
Grip rubber unit ..... A 2 7
C/F cover unit ..... A 2 8
Rating plate ..... A 2 8

Adjustment through PC operation required at replacement of part(s)

1. For camera ..... A 2 9

How to replace the battery for backup ..... A 3 0

Shooting image adjustment and TFT adjustment ..... A 3 1 ~ A

ASSEMBLY AND ADJUSTMENT

1. Back door unit

Other small parts

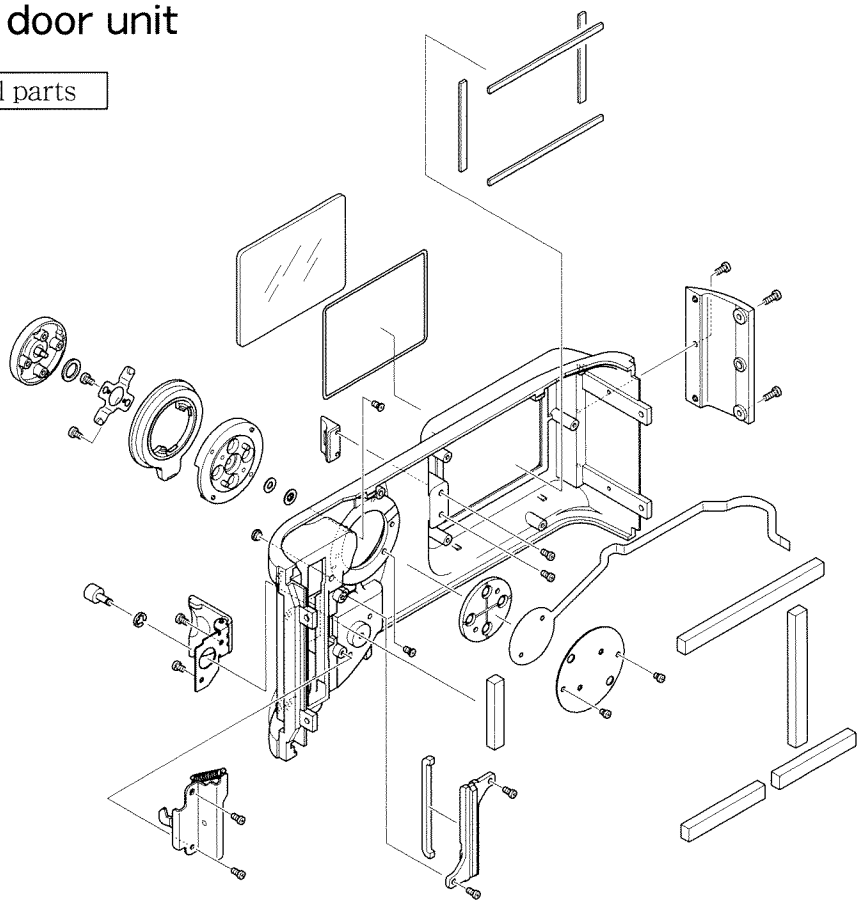

Note : For replacing the sponge for humidity-proof, be sure to apply the oil barrier to the sponge.

TFT assembly unit

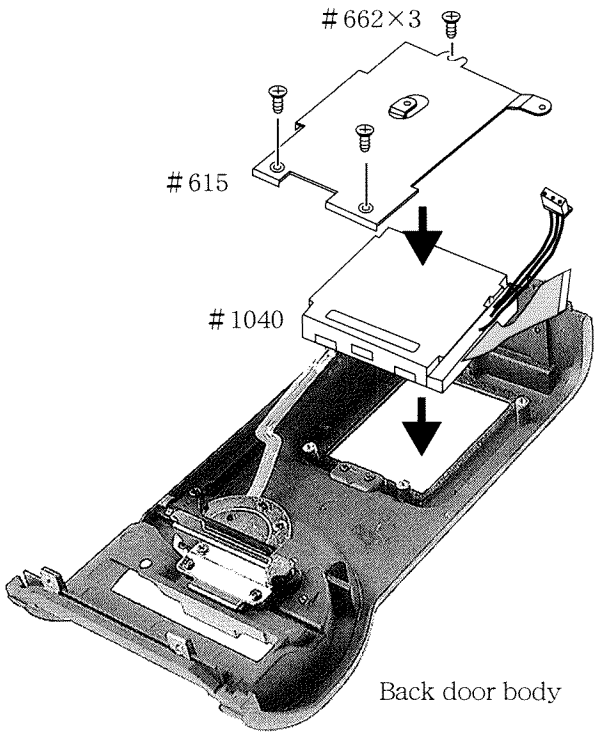

- Install the TFT assembly unit (#1040) and TFT retainer (#615) to the back door body.
- Set the three screws (#662).

Inverter circuit PCB/Indication LCD relay FPC

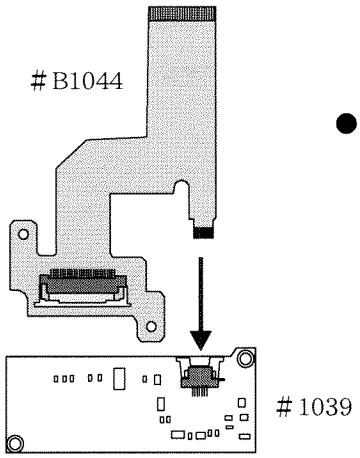

- Connect the indication LCD relay FPC (#B1044) to the inverter circuit PCB (#1039).

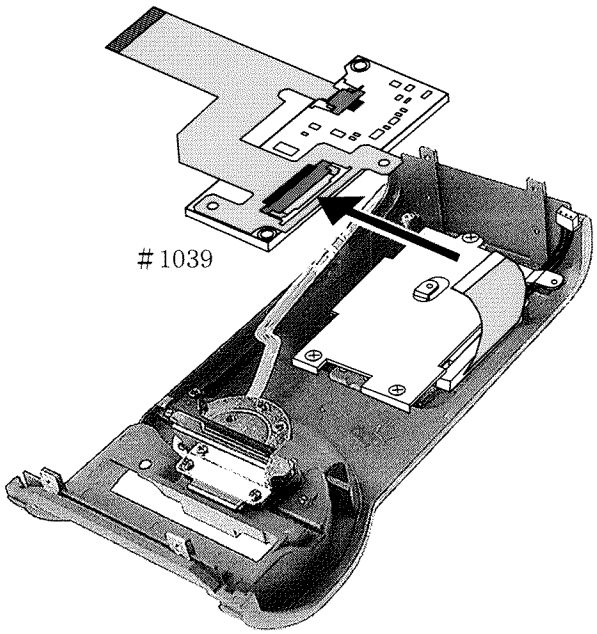

- Connect the FPC of the TFT asembly unit to the inverter circuit PCB (#1039).

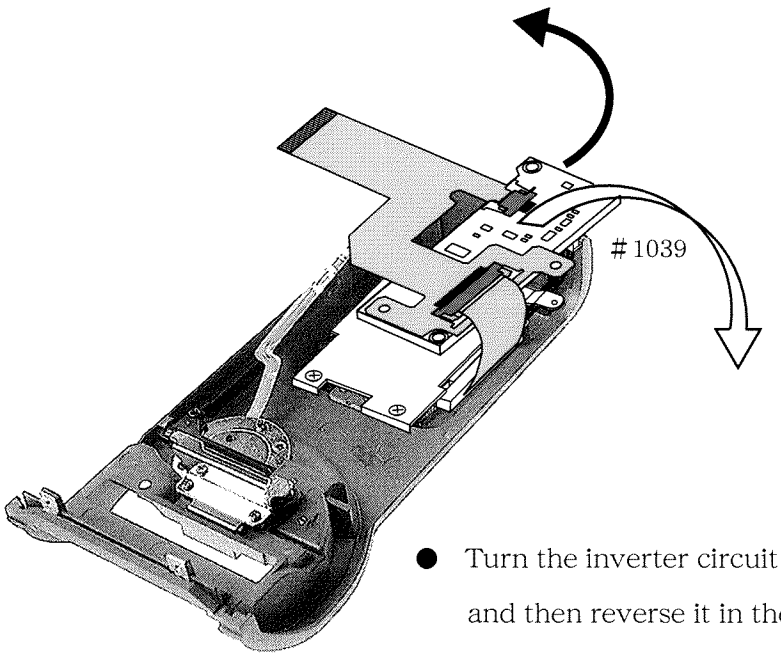

- Turn the inverter circuit PCB (#1039) in 90° counterclockwise and then reverse it in the white arrow mark direction.

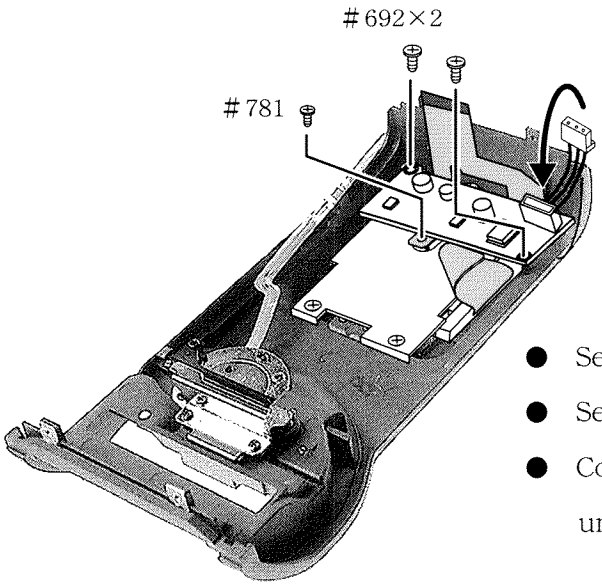

- Set the two screws (#692).
- Set the screw (#781).
- Connect the lead wire connector of the TFT assembly unit to the connector of the inverter circuit PCB.

2. Top cover unit

Note: The top cover unit of D1 is not equipped with the eyepiece unit.

Other small parts → Top cover FPC / film advance mode dial / triple operation buttons

Front C/DFPC unit → Release switch unit → Front C/D unit

3. Front body

Other small parts → I base plate, L base plate → How to adhere the main mirror

L I unit → Preview unit → AF driving unit

Lens release button unit, lens release base plate → Attachable lens switch unit, AF/M switch circuit board

Bayonet mount, apron → Horizontal AF lever, AF unit

Height adjustment for the AF coupling → Height adjustment for the aperture lever

Prism box

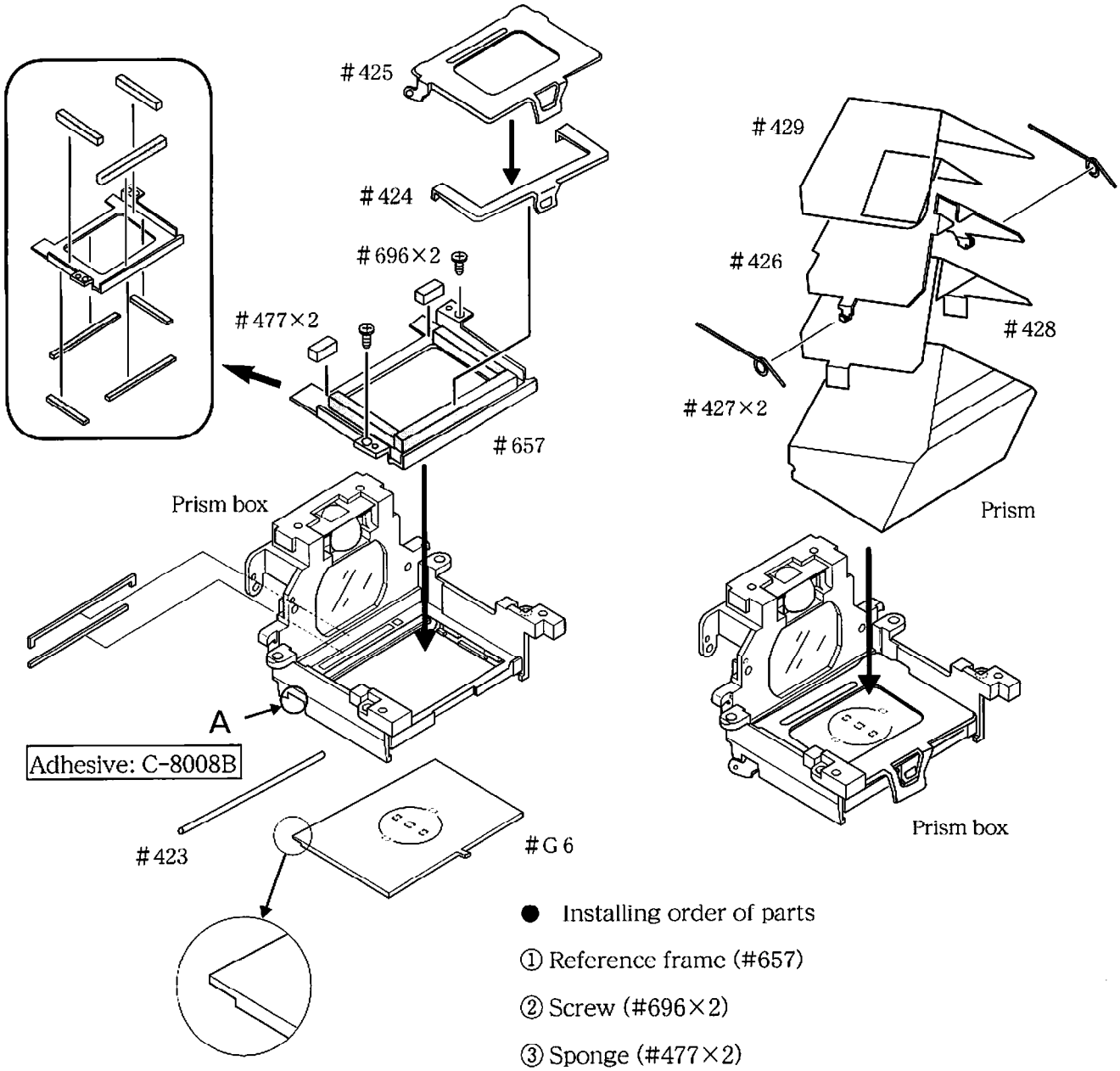

● Installing order of parts

① Reference frame (#657)

② Screw (#696×2)

③ Sponge (#477×2)

④ Superimpose frame (#424)

⑤ Finder field frame (#425)

⑥ SI indication plate (#G6)

⑦ Screen frame indication shaft (#423)

⑧ Apply the adhesive, Super X, to the right and left of the unit "A".

⑨ Prism

⑩ Pentaprism retainer sheet (#248)

⑪ Pentaprism retainer plate (#426)

⑫ Pentaprism retainer spring (#427): 2 pcs.

⑬ Pentaprism retainer insulating sheet (#429)

⑭ Sponge (#893)

⑮ Sponge (#432×2

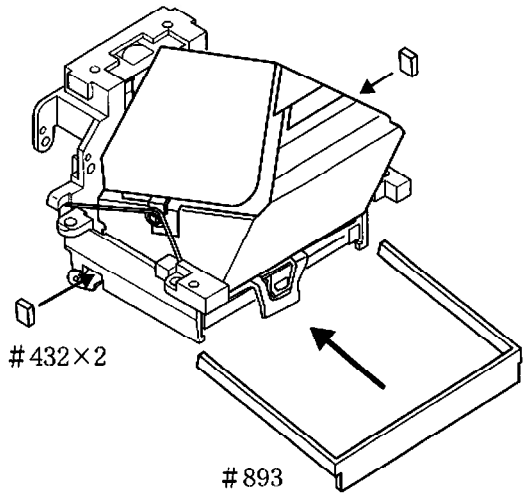

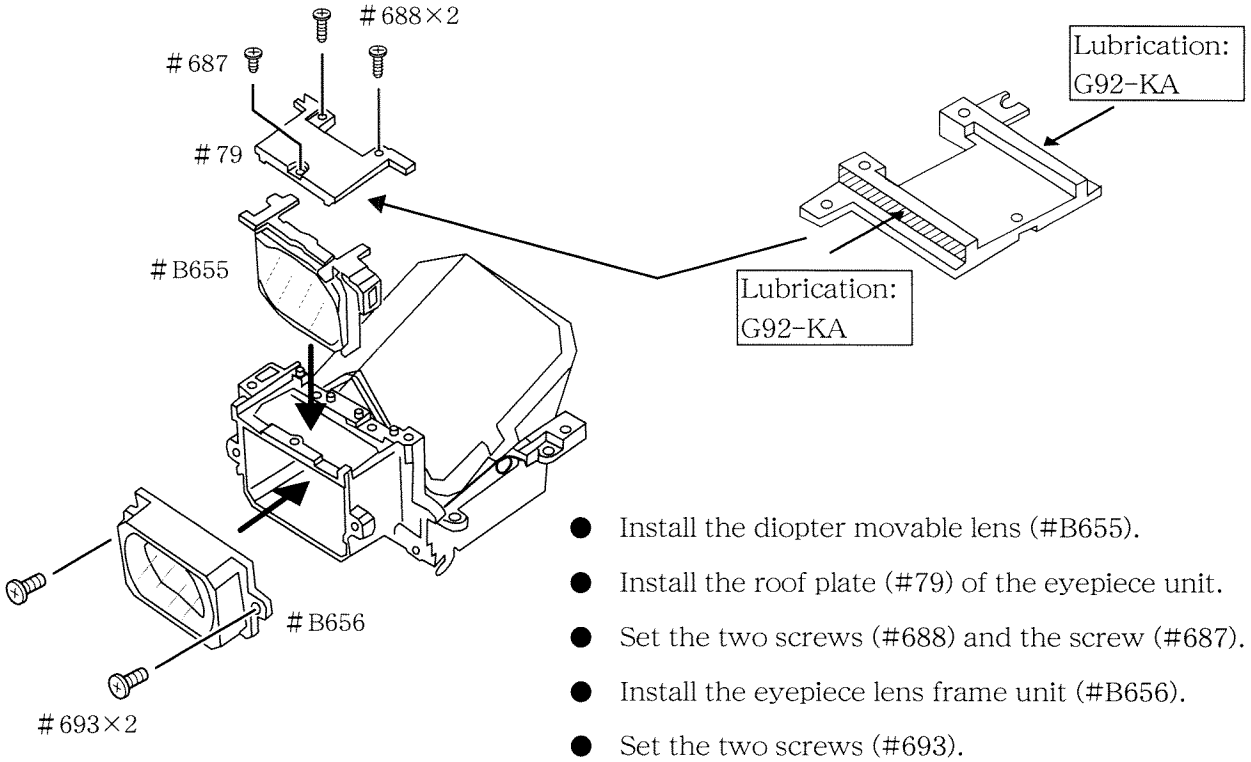

- Install the diopter movable lens (#B655).
- Install the roof plate (#79) of the eyepiece unit.
- Set the two screws (#688) and the screw (#687).
- Install the eyepiece lens frame unit (#B656).
- Set the two screws (#693).

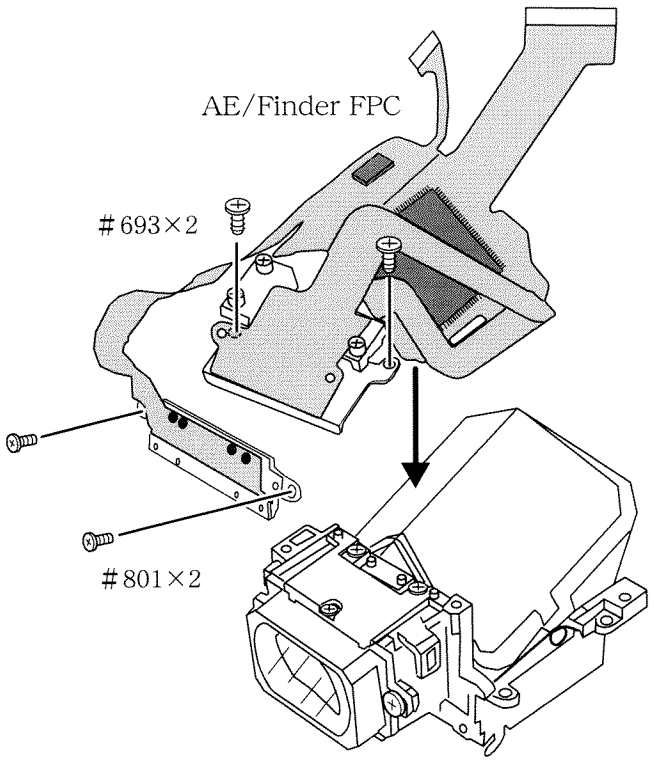

- Install the AE/Finder FPC by pulling it toward the eyepiece side.
- Set the two screws (#693).
- Install the internal LCD unit by pulling it toward the upper side.
- Set the two screws (#801).

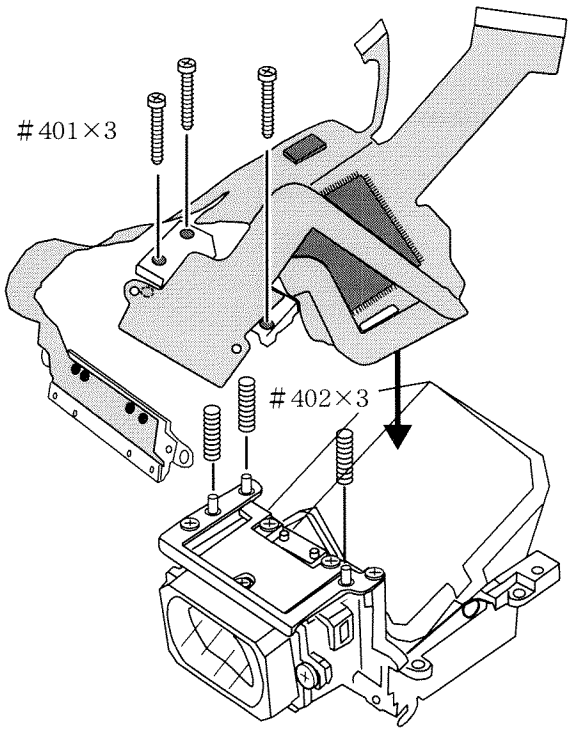

※ When the AE/Finder FPC is replaced:

- Install the AE/Finder FPC by pulling it toward the eyepiece side.。
- Set the three springs (#402).
- Set the three screws (#401)

Note:

After tightening the three screws (#401), return them by four turns. After installing, check the condition of the spring (#402).

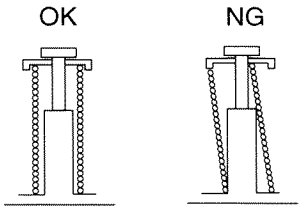

- Check and adjust the alignment of the AE 1005 sensor. (Refer to Page A17.)

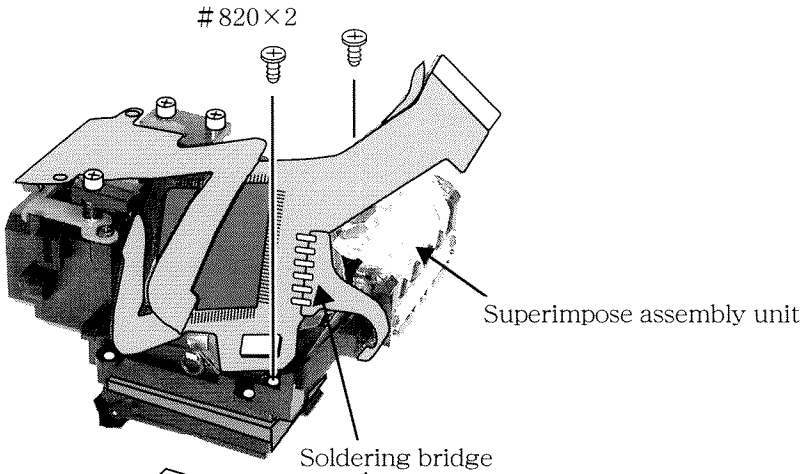

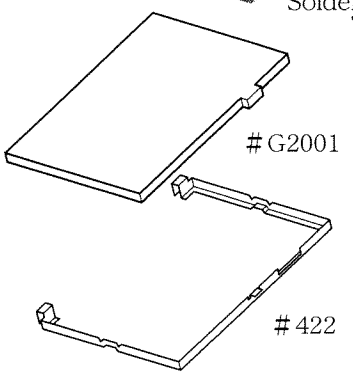

- Install the screen frame (#422).
- Install the screen (#G2001).
- Install the superimpose assembly unit.
  Refer to the repair manual of F100 for the installing position.
- Set the two screws (#820).
- Solder the soldering bridge.

Angle adjustment of main mirror and sub mirror to 45° → Adjustment for the infinity alignment

Light baffle plate → Main FPC

Diopter adjusting mount

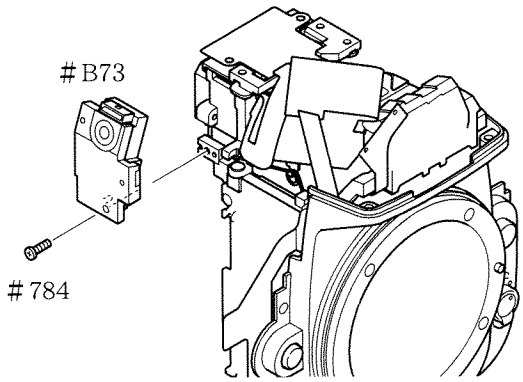

- Install the diopter adjusting mount (#B73) to couple with the diopter movable lens.
- Set the two screws (#784).

Soldering the front body unit

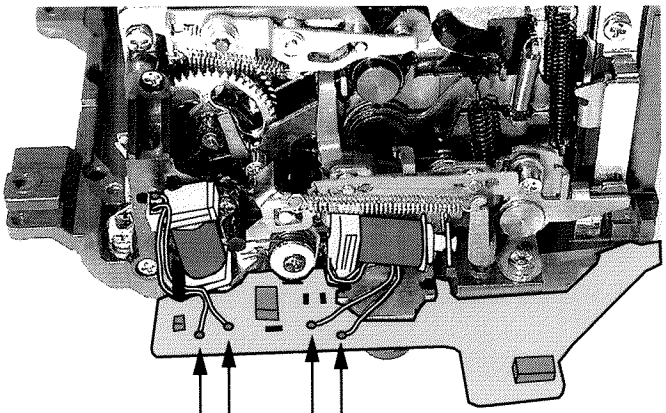

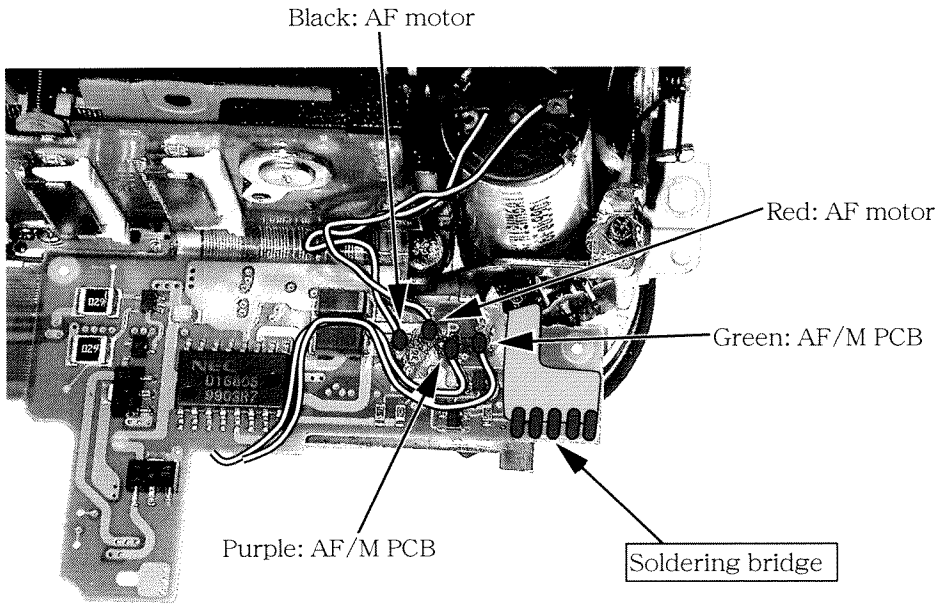

Connecting the connectors of the front body unit

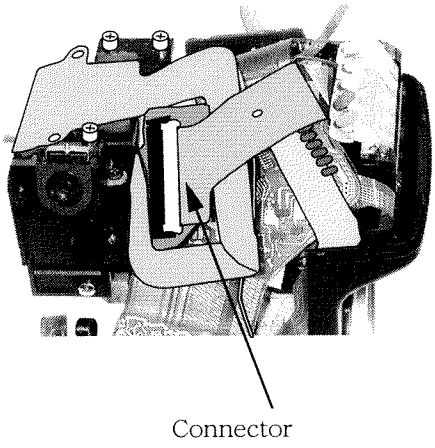

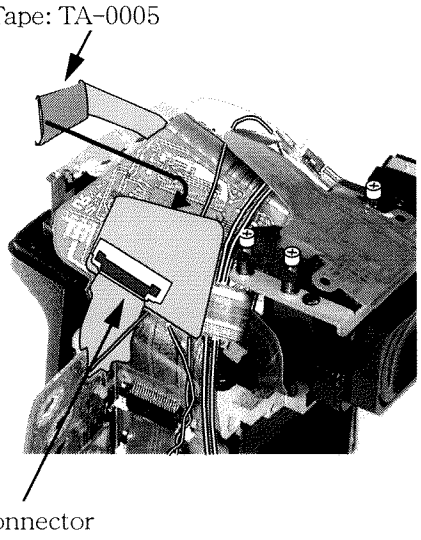

- Connect the FPCs to the connectors.

4. Rear body

Other parts

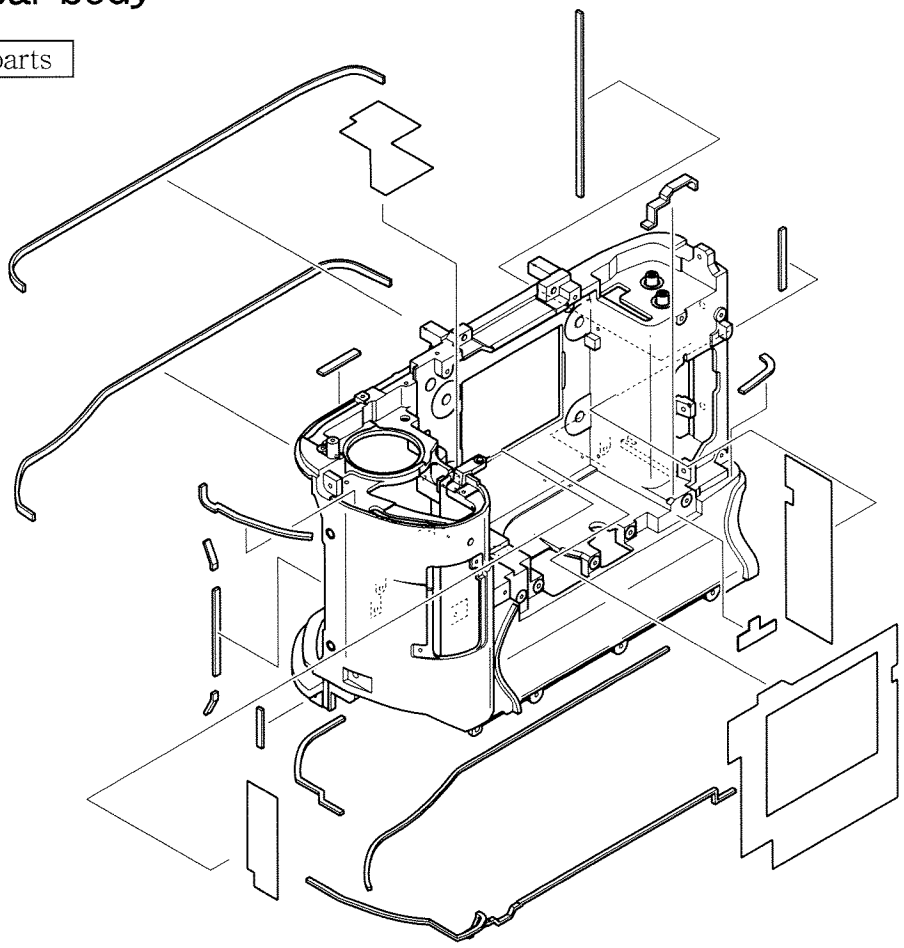

Note : For replacing the sponge for humidity-proof, be sure to apply the oil barrier to the sponge.

Shutter assembly unit

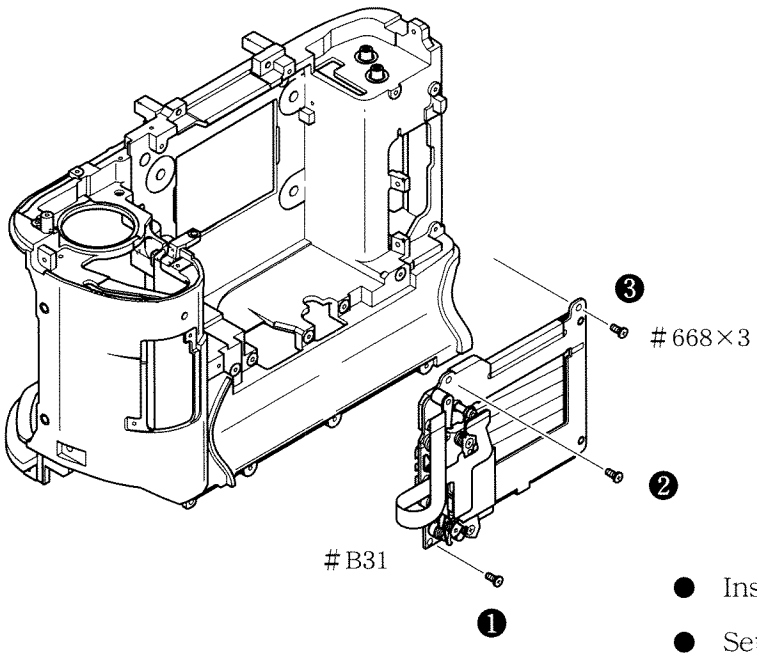

- Install the shutter unit (#B31).
- Set the three screws (#668).

Note:❶~❸are the tightening order.

Power FPC

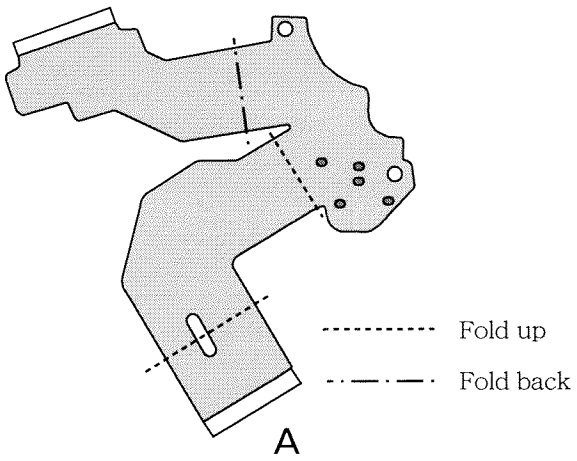

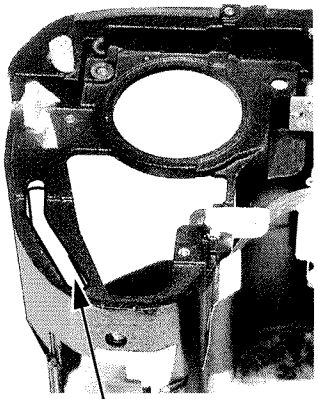

Put the unit "A" of the power FPC into this hole.

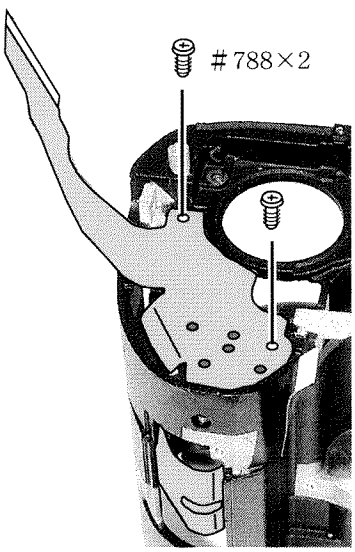

- Install the power FPC.
- Set the two screws (#788).

Sequence unit

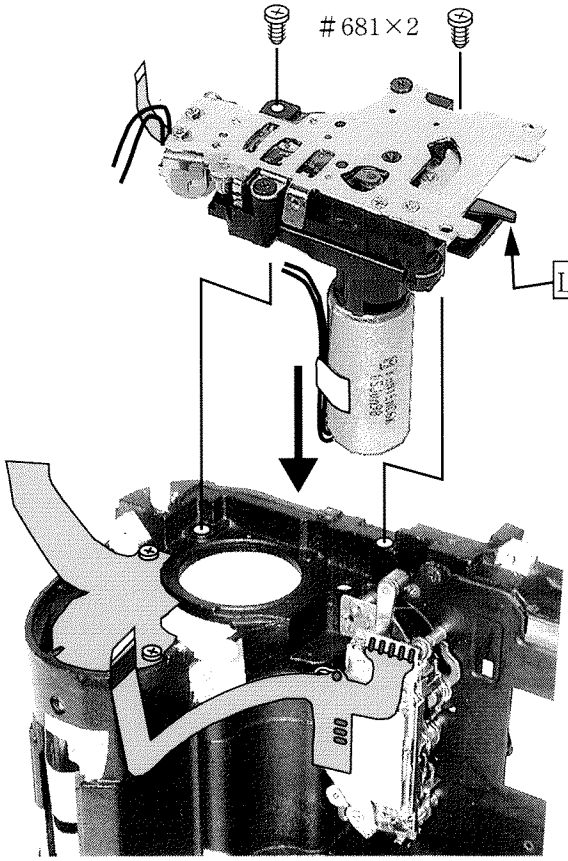

- Install the sequence unit.
- Set the two screws (#681).

Soldering the power FPC

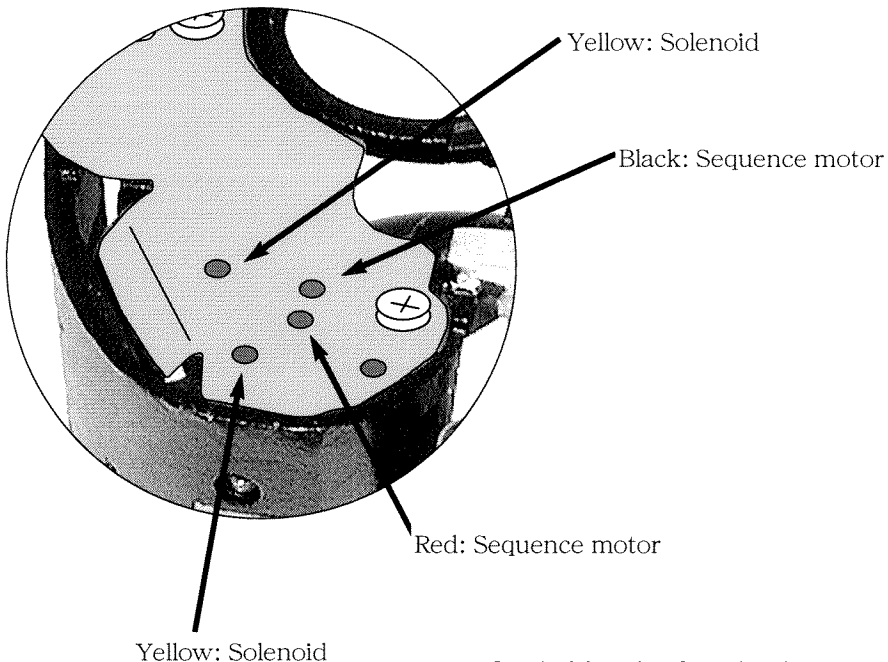

- Solder the four lead wires.

Main C/D assembly unit

Film rewind relay FPC

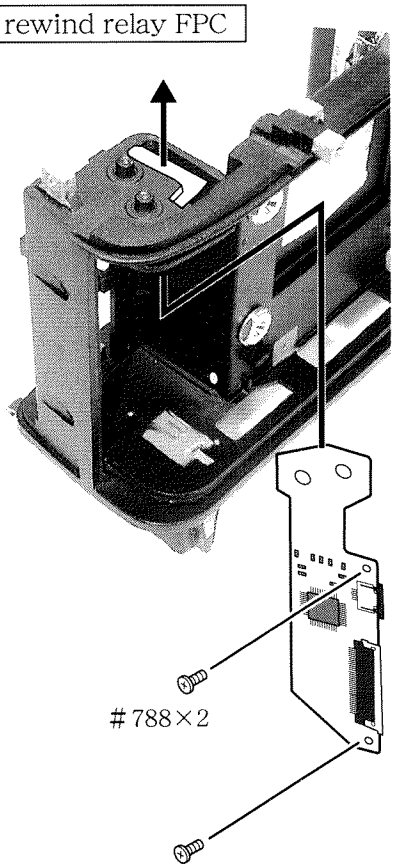

- Install the film rewind relay FPC.
- Set the two screws (#788).

TFT drive PCB

- Install the TFT drive PCB.
- Set the two screws (#684).

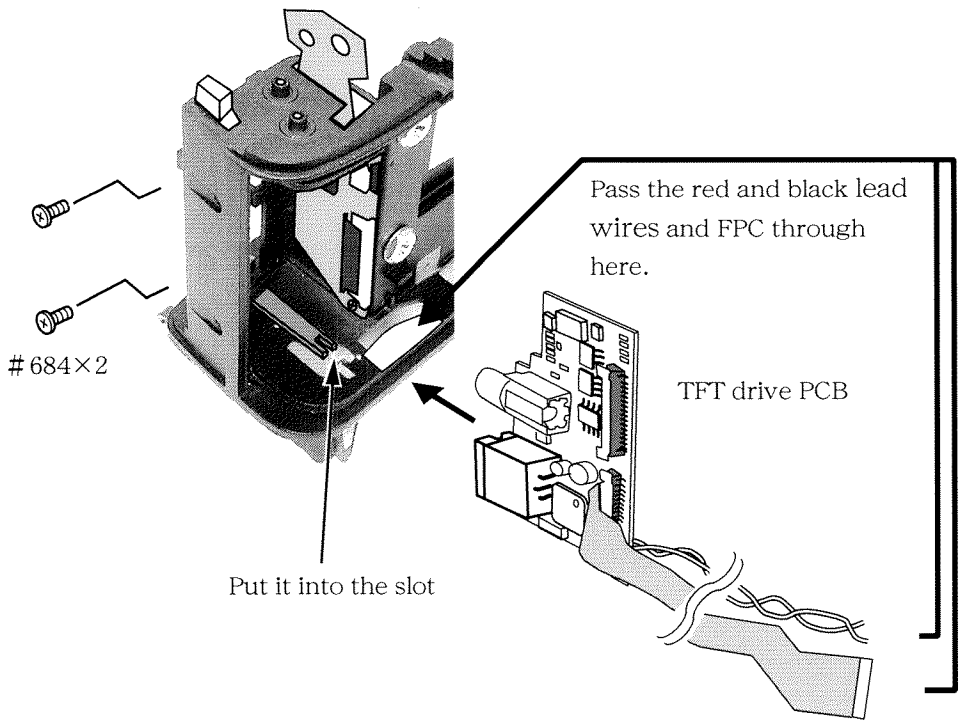

Grip PCB unit

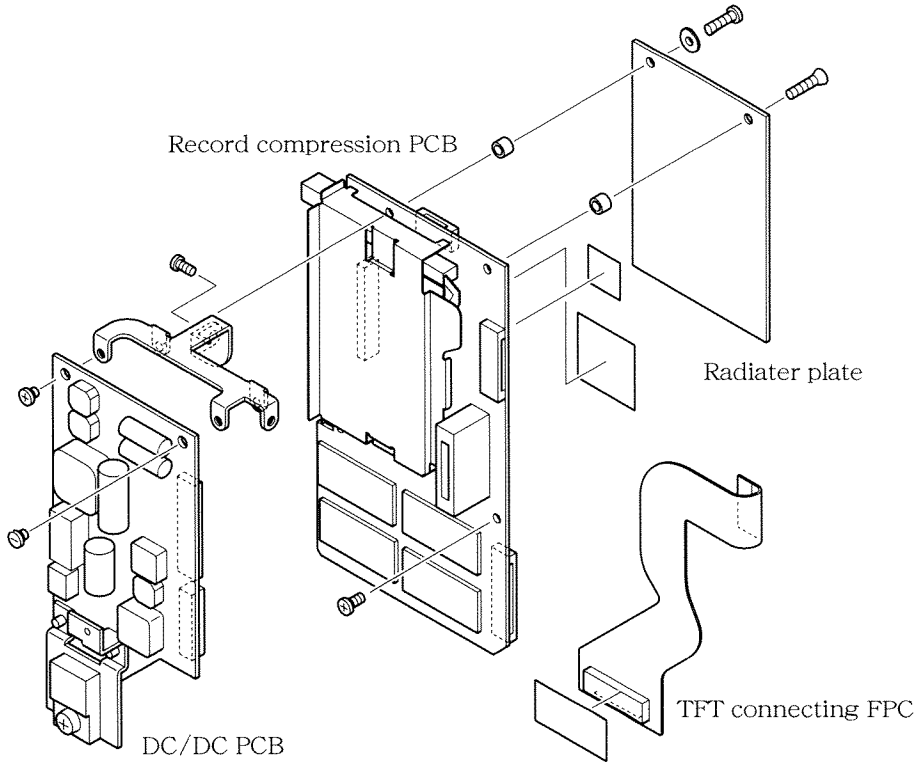

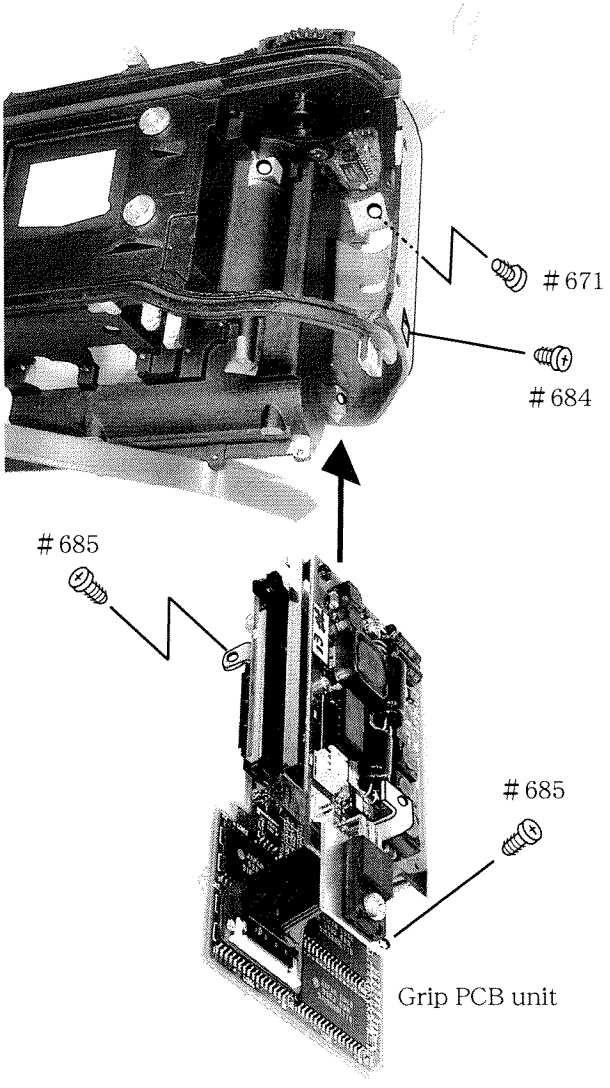

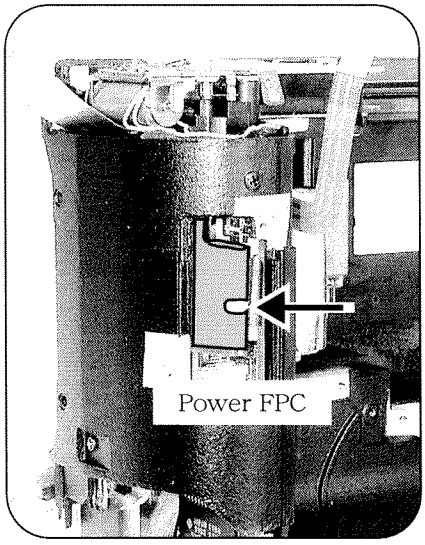

- Install the grip PCB unit.
- Set the two screws (#685).
- Set the screw (#684).
- Set the screw (#671).
- Connect the power FPC to the connector.

5. Mounting and fixing the front body on to the rear body

Fixing the front body to the rear body

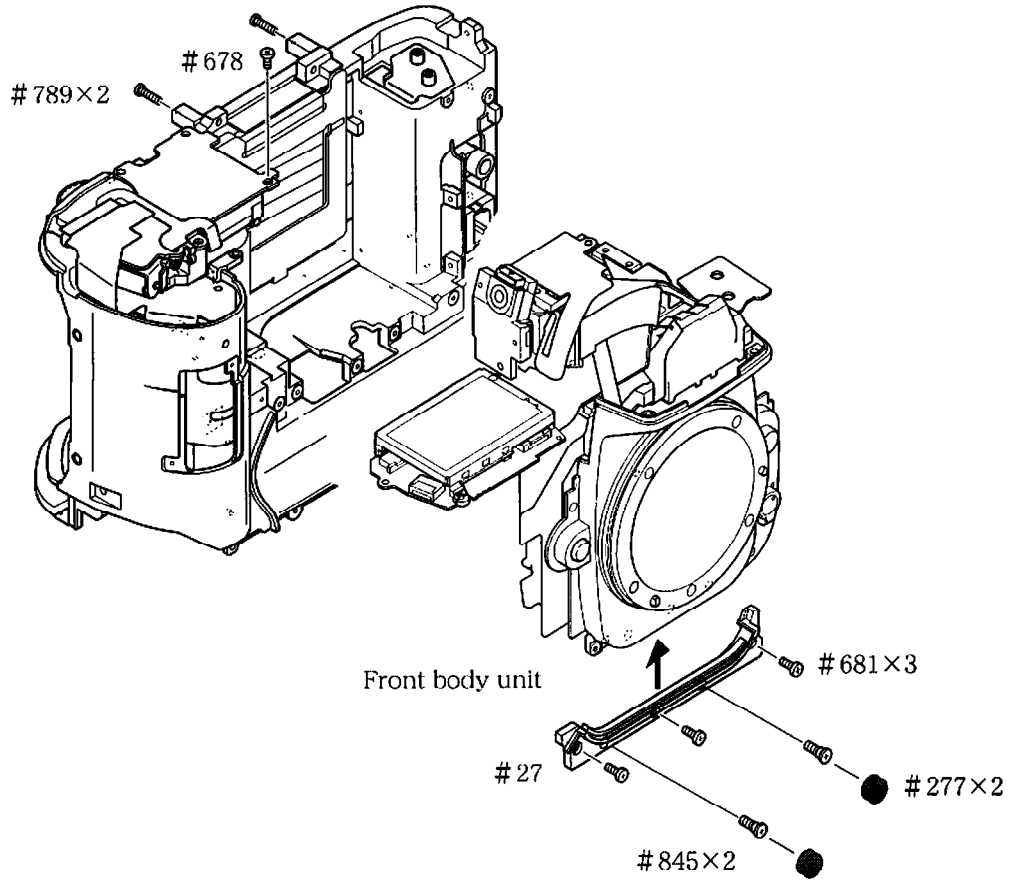

- Install the apron lower cover (#27) to the front body unit.
- Install the front body unit to the camera body.
- Set the two screws (#845).
- Set the two screws (#789).
- Set the screw (#678).
- Set the three screws (#681).
- Set the two sponges (#277).

Adjustment for the bodyback

- Measure four places between the bayonet surface and the CCD assembly unit installing surface.

Standard: 48.00±0.02mm / Parallelism: Within 0.02mm

- If the value is out of the standard, put washers between the rear body and front body for adjustment.

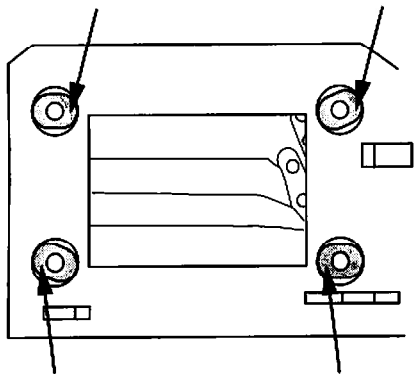

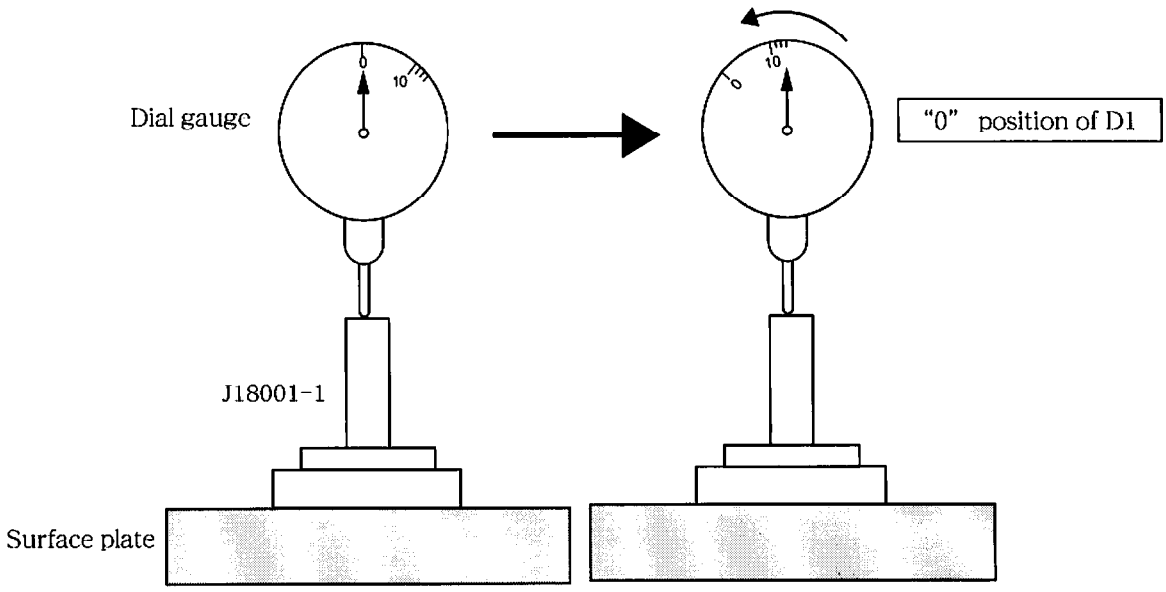

① Put the tool (J18001-1) on the surface plate and fit the dial gauge to "0".

② From the "0" position fitted in ①, turn the dial gauge by 13 graduations to the positive side. (This is the "0" position of D1.)

③ Measure the body back with the "0" position of D1 as a reference.

Connecting the connectors/Soldering the soldering bridge

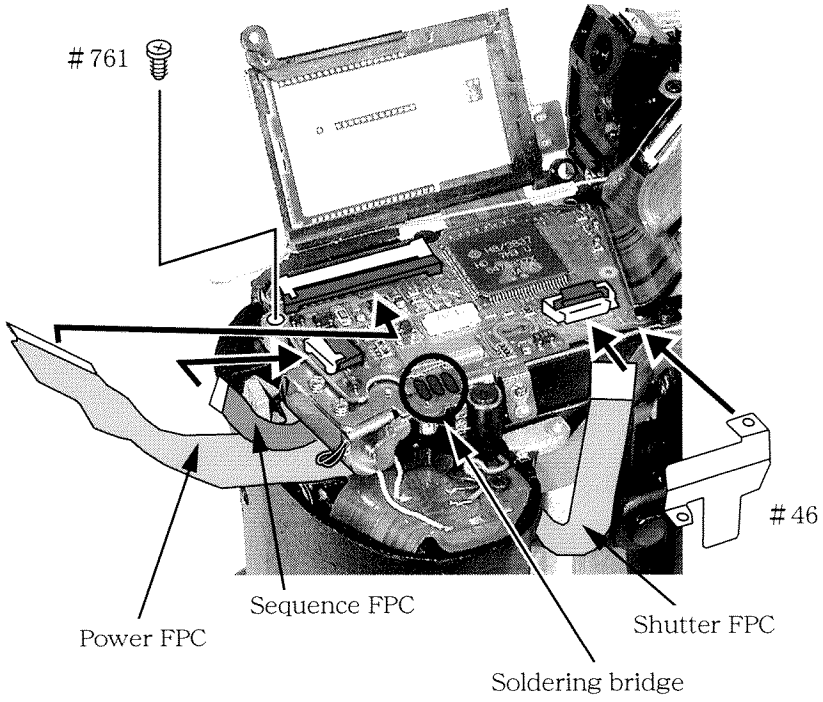

- Set the screw (#761).
- Connect the FPCs to the connector.
- Solder the soldering bridge.
- Put the sequence PCB continuity plate (#46) between the main PCB and sequence unit.

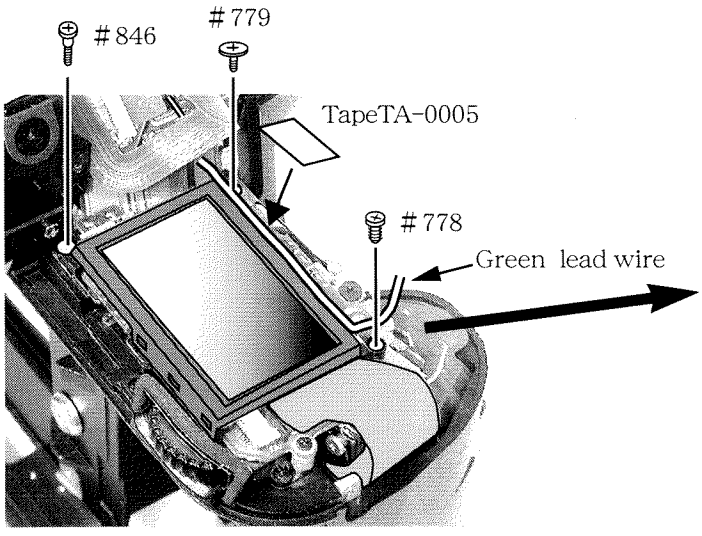

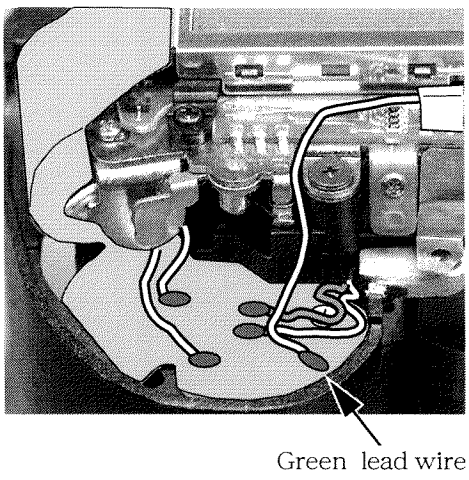

- Set the screws (#846), (#779) and (#778).
- Adhere the tape (TA-0005) and retain the green lead wire.
- Solder the green lead wire.

Remote terminal unit

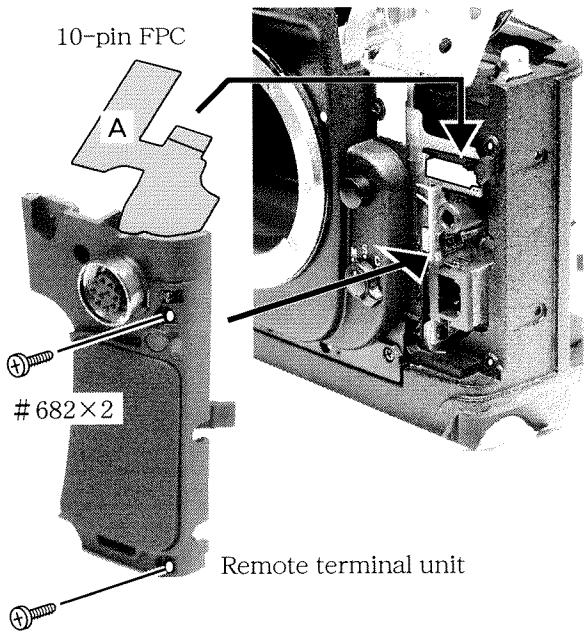

- Put the unit "A" of the 10-pin FPC under the front body.
- Connect the 10-pin FPC to the connector.
- Install the remote terminal unit.
- Set the two screws (#682).

6. External units and image PCBs

Top cover unit-1

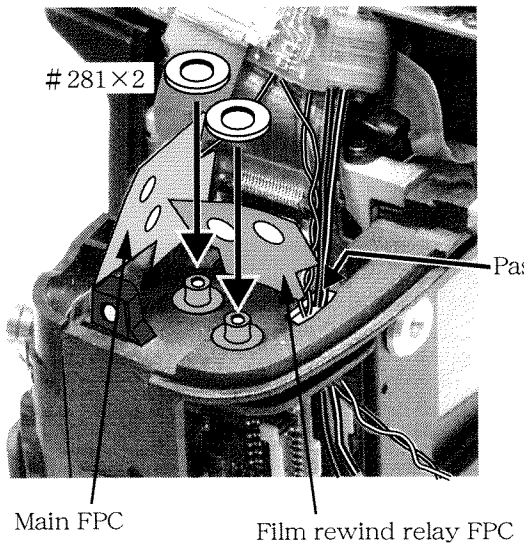

- Set the two press-contact rubbers A (#281).
- Install the film rewind relay FPC and main FPC.
- Pass the four lead wires of the main FPC toward the lower side through the hole.

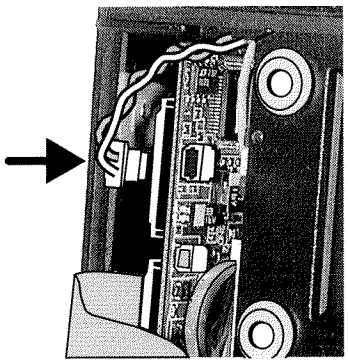

- Connect the red and blue lead wires connector.

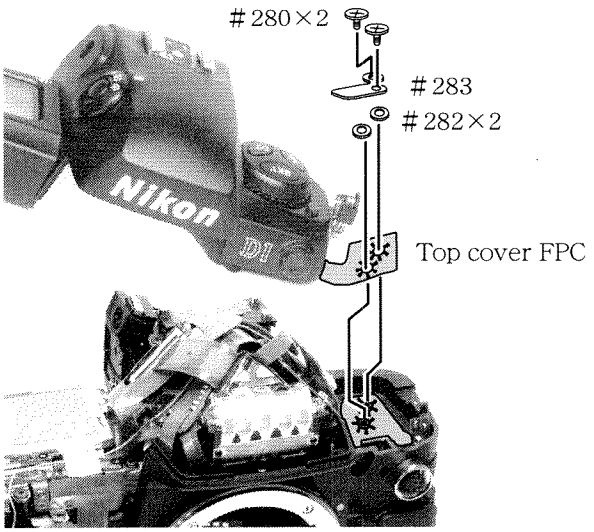

- Install the top cover FPC.
- Set the two press-contact rubbers B (#282).
- Set the press-contact plate (#283).
- Set the two screws (#280).

Check and adjustment of alignment for AE 1005 sensor

When disassembling and replacing the finder FPC unit or the prism box unit, check and adjust the alignment of the AE 1005 sensor.

- After tightening the three screws (#401), return them by four turns and set there.
- Remove the SI indication plate in the finder with the tool (T93004). Then, install the tool (J15364) and finder screen.
- Select "CCD alignment check and adjustment" in the adjustment software and check and adjust the alignment as instructed.

  Refer to Page A18 for connection the camera with the personal computer.

Note:When checking and adjusting, cover the AE 1005 sensor unit with a black cloth or others to darken it. Then, carry out measurement.

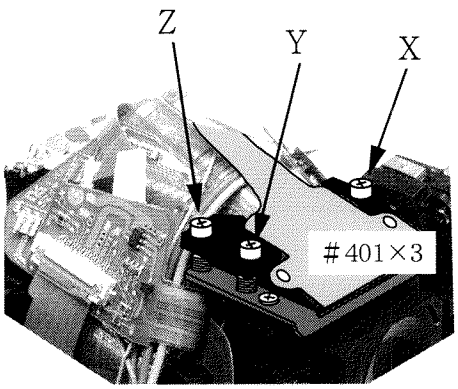

- Turn the screw "X" or "Y" till the display of the personal computer is within the standard.
- The screw "Z" is a reference screw and so it is not recommended to turn it. Under unavoidable circumstances, turn the screw "Z" for adjustment.

The upper right on the screen of the personal computer

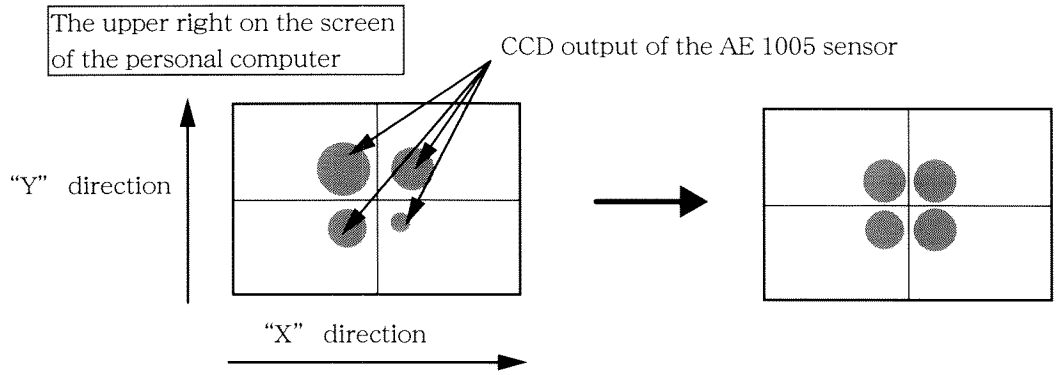

- Select "Check inclination" in the adjustment software and check the inclination of the AE 1005 sensor.
- The inclination can be checked but cannot be adjusted.
  If the inclination is out of standard, replace the finder FPC unit.

Screen of the personal computer

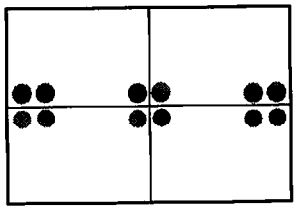

How to connect with each other

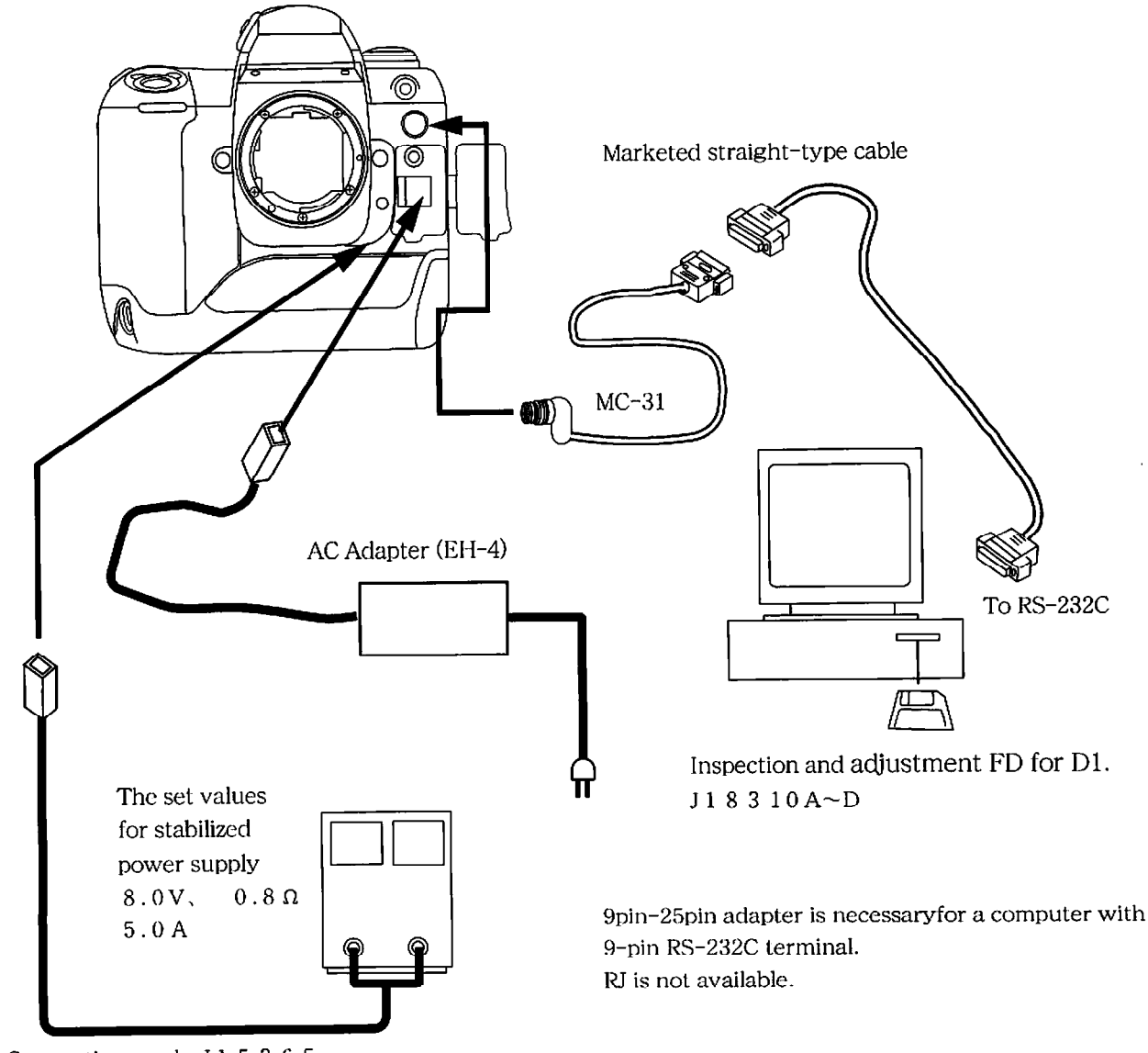

- As a power supply for D1, employ the AC adapter EH-4 or the regular power supply.
- The MC-31 and the AC adapter EH-4 are Nikon's original accessories dedicated for the applicable product. For connection, you shall be kindly required to purchase them.

Top cover unit-2

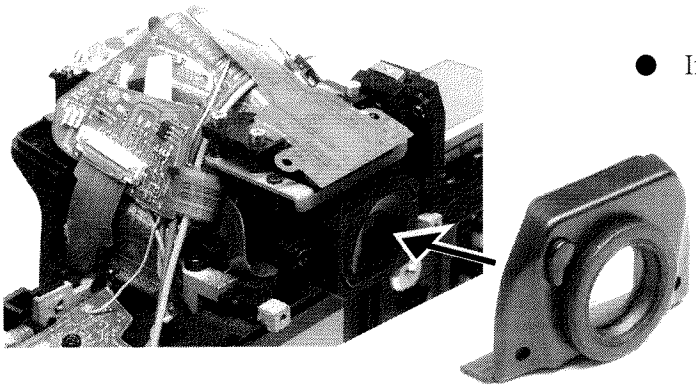

- Install the eyepiece block unit.

Eyepiece block unit

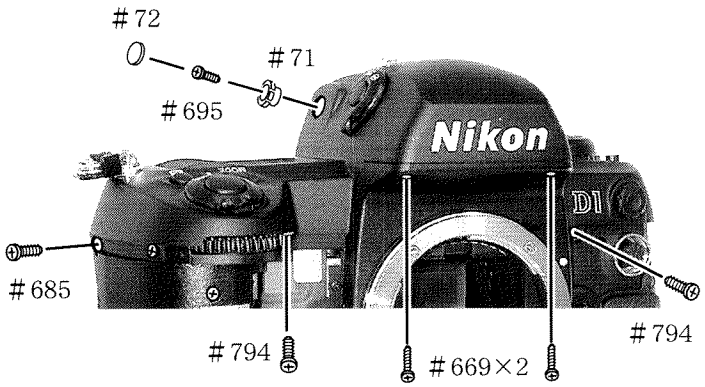

- Set the two screws (#669).
- Set the two screws (#794).
- Set the screw (#685).
- Set the diopter adjusting dial (#71).
- Set the screw (#695).
- Set the diopter adjusting knob (#72).

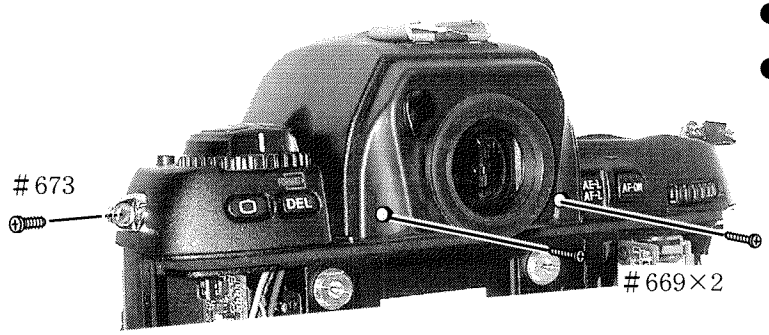

- Set the two screws (#669).
- Set the screw (#673).

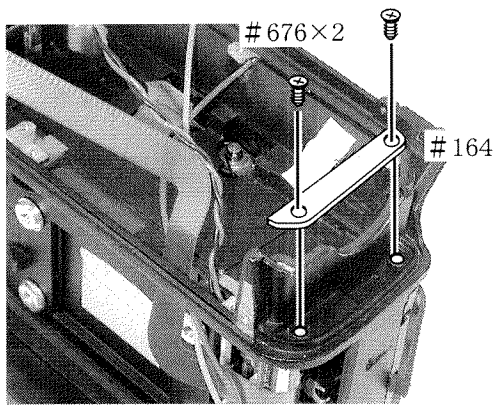

- Set the battery P remove plate(#164).
- Set the two screws (#676).

Adjustment through PC for camera body

1) AE adjustment

Conduct each adjustment in accordance with the adjustment software instructions on PC screen.

1. Check and adjustment of alignment for AE 1005 sensor. (Refer to the page A17)
2. Adjustment for temperature detection voltage.
3. AE adjustment and Inspection

Note : The AE accuracy can not be checked by the exposure value from the shutter tester conventionally employed. Measured value comes to appear on PC screen.

4. Inspection for aperture accuracy

Note : As well as the case of AE accuracy above, the aperture accuracy can not be checked by the aperture value from the conventional shutter tester. The aperture pulse value comes to appear on PC screen.

5. TTL adjustment

Note : Conventionally used time counter and the gray shutter blade, or the standard reflection paper, are no more needed. Besides, on the contrary, for adjustment, the SB-28 needs to be attached. The result comes to appear on PC screen.

6. Battery check adjustment

Note : Execute inspection and adjustment under the following conditions. :

- Do not attach / load the lens and the CF card.
- Set the photography mode to other than 'PB'.
- Turn off the EL of LCD.

Confirmation of the battery check display mode

After adjusting the battery check, input below-mentioned each voltage data to the camera and then check the external LCD mode.

Note : Conduct the inspection by switching each voltage in order of No. 1 to 5.

External LCD	Set up voltage from the stabilized power supply	
	① 7.30 V	⑤ 7.55 V
	② 7.15 V	④ 7.21 V
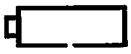	③ 6.80V	

2) AF adjustment

[Inspection and adjustment items]

① Inspection and adjustment for the AF accuracy : whole item shall be adjusted.
② YAW, PITCH
③ Lark adjustment
④ CCD output

〔Tools in use〕

1. For adjustment of whole item :

   The tool(s) used for the AE-oriented adjustment shall be utilized.

2. For check of the AF accuracy

   ① Z adjustment lens J18266 for F5

   ② AF adjustment stand J15259

   ③ Z lens holder J15280, or position conversion adapter J15271 for tripod socket

   ④ AF chart J18237 for F5

   ⑤ Lighting box J15264 for high frequency

3. For adjustment of yaw and pitch

   ① The whole tool used for the check of AF accuracy just as mentioned above

   ② Adjustment tool for yaw and pitch J18230

4. For adjustment of lark

   The whole tool used for the check of AF accuracy just as mentioned above

5. For adjustment of CCD output

   AF 50/1.4S lens

CCD bracket unit

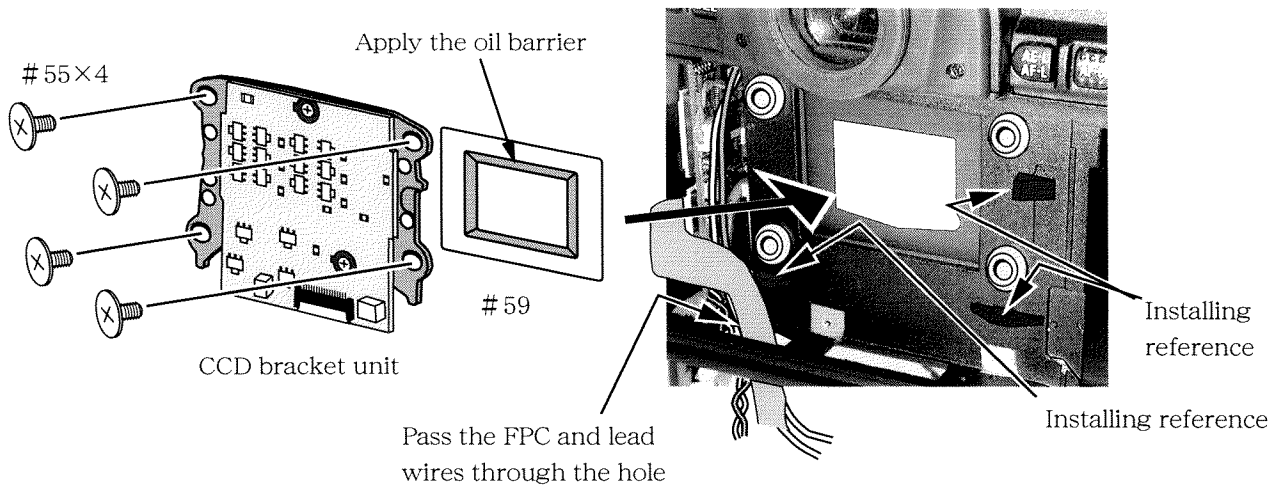

- Set the mask (#59).
- Install the CCD bracket unit by pulling it toward the installing reference surface side (lower right).
- Set the four screws (#55).

Note:Remove dust from the CCD surface side of the CCD bracket unit with a blower.

- Pass the following lead wires and FPC to under the camera through the hole: the red and black lead wires sent from the TFT drive PCB, FPC and the pink and black codes sent from the main FPC

TG PCB

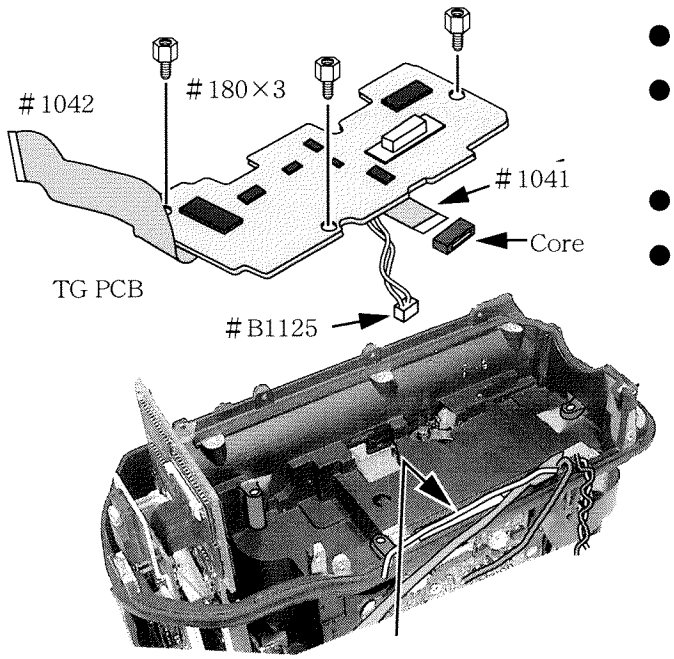

- Pass the core through the FPC (#1041).
- Pass the FPC (#1041) and lead wire connector (#B1125) through the hole.
- Install the TG PCB.
- Set the three screws (#180) with the tool (T93003).

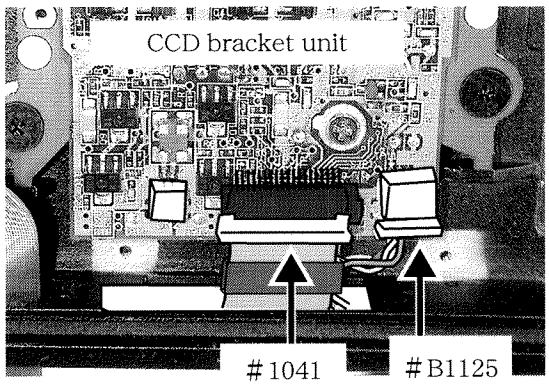

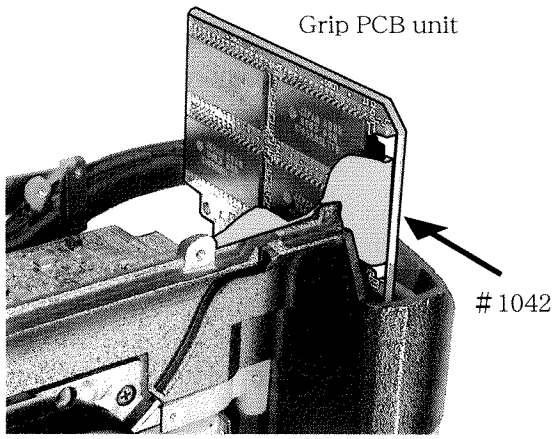

- Connect the FPC (#1041) and lead wire connector (#B1125) to the CCD bracket unit.
- Connect the FPC (#1042) to the grip PCB unit.

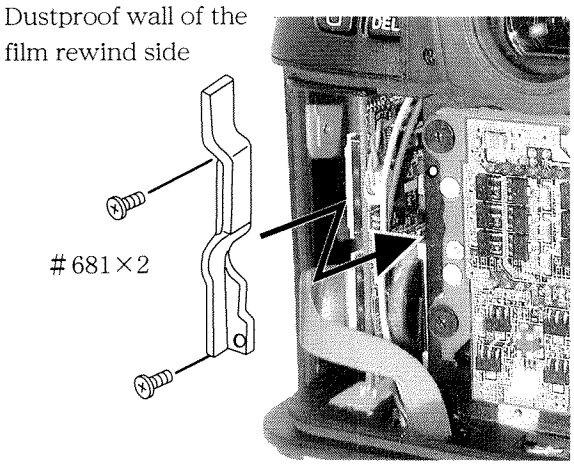

- Install the dustproof wall of the film rewind side.
- Set the two screws (#681).

CCD power PCB

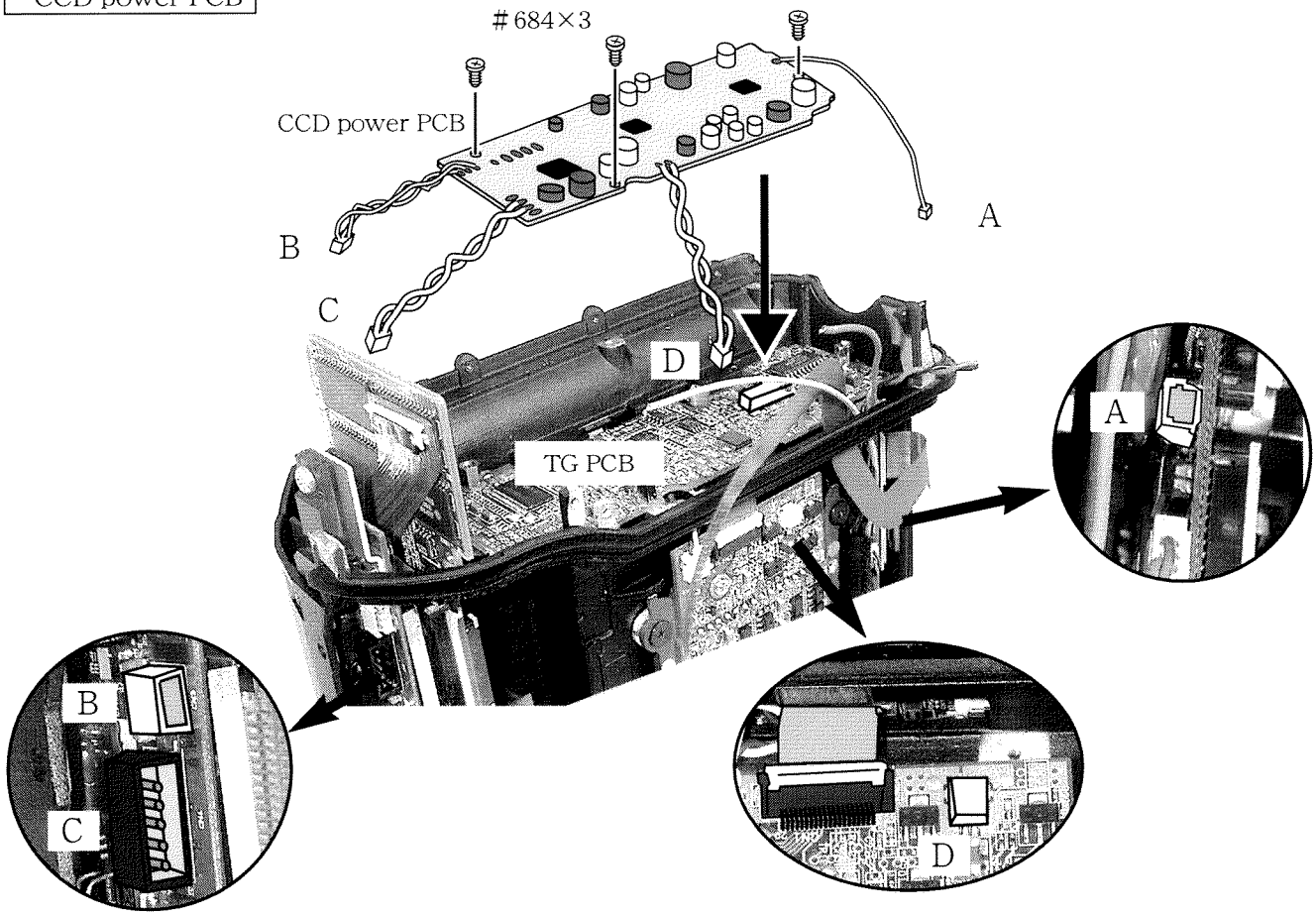

- Install the CCD power PCB. (Connect it to the TG PCB with connector.)
- Set the three screws (#684).
- Connect the lead wire connectors. [A-A] · [B-B] · [C-C] · [D-D]

Battery contact assembly unit

Put the FPC (#1045) between the PCB and FPC (#1042)

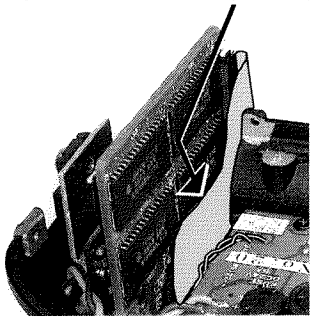

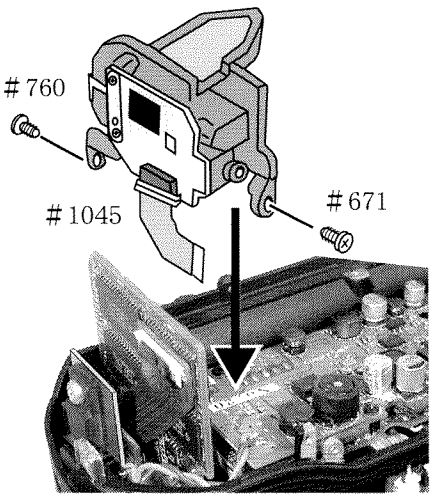

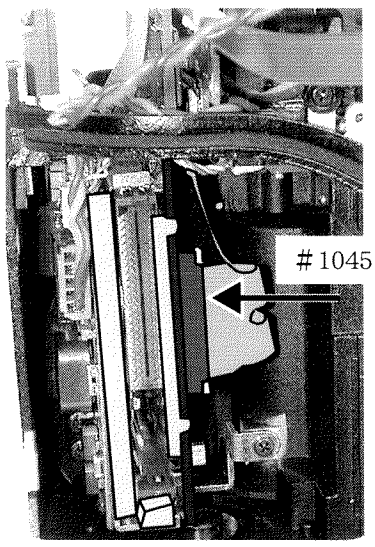

- Install the battery contact assembly unit.
- Set the screws (#671) and (#760).
- Connect the FPC (#1045) with a connector

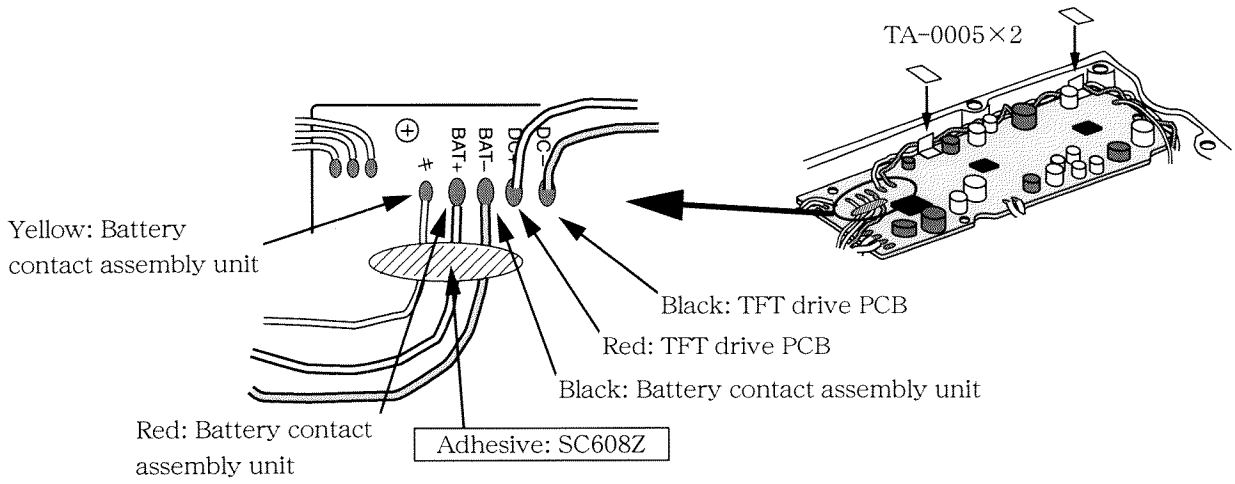

- Solder the red and black lead wires sent from the TFT drive PCB onto the CCD power PCB.
- Solder the red, black and yellow lead wires sent from the battery contact assembly unit onto the CCD power PCB.
- Retain the red and black lead wires sent from the TFT drive PCB with the tape (TA-0005).
- Retain the red, black and yellow lead wires sent from the battery contact assembly unit with the adhesive (SC608Z).

Rear LCD assembly unit

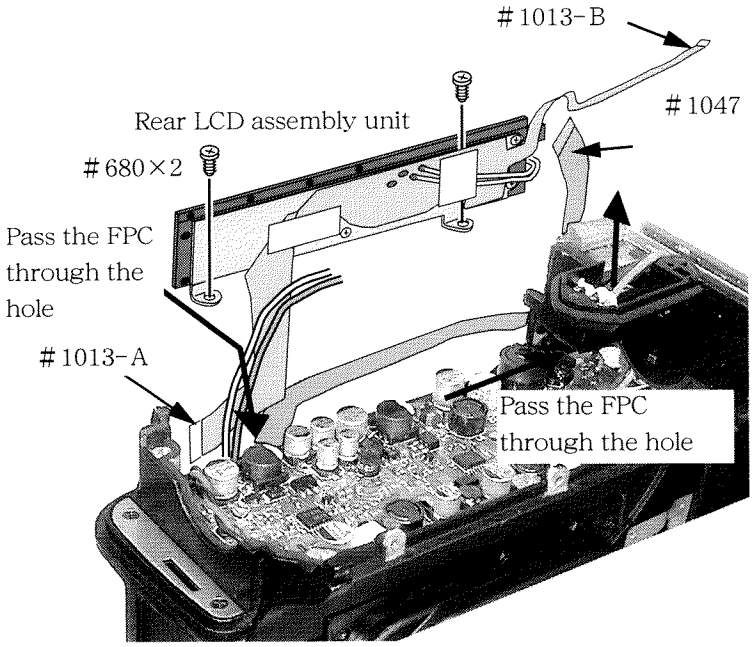

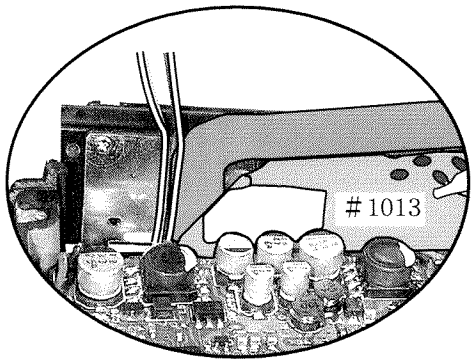

Note:The FPC (#1013) must be at the innermost.

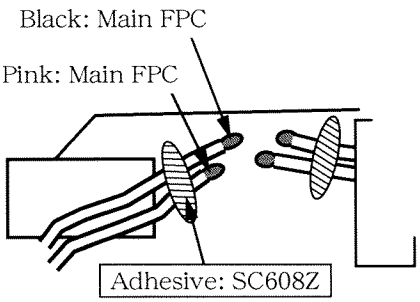

- Pass the FPC (#1013-A) through the hole.
- Pass the FPC (#1013-B) through the hole and pull it out in the arrow mark direction.
- Install the rear LCD unit.
- Set the two screws (#680).
- Solder the pink and black lead wires sent from the main FPC.
- Retain the pink and black lead wires sent from the main FPC with the adhesive (SC608Z).
- Pass the FPC (#1047) through the hole and pull it in the arrow mark direction.

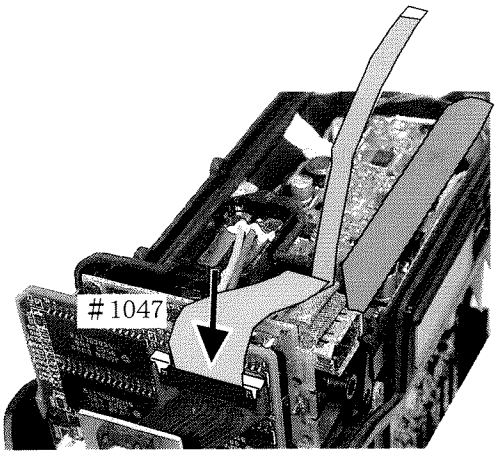

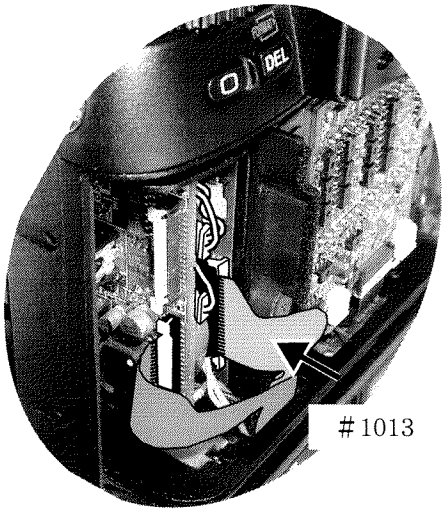

- Connect the FPC (#1047) with a connector.
- Connect the FPC (#1013) with a connector.

Cover plate unit

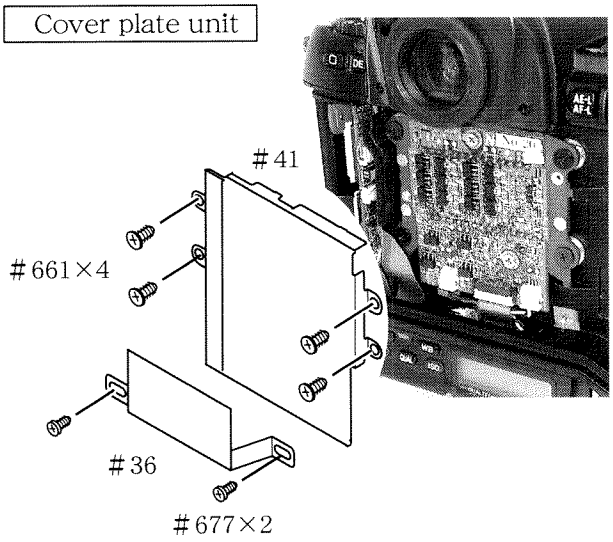

- Set the cover plate (#41).
- Set the four screws (#661).
- Set the CCD flexible cover plate (#36).
- Set the two screws (#677).

Battery chamber: Roof plate

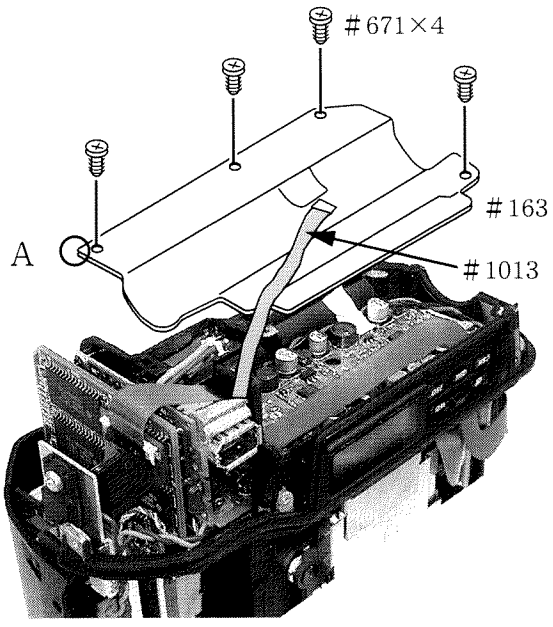

- Set the roof plate (#163) of the battery chamber.
- Set the four screws (#671).

Note:

Put the unit "A" under the battery contact unit. Pull out the FPC (#1013) to above the roof plate of the battery chamber.

Back door unit

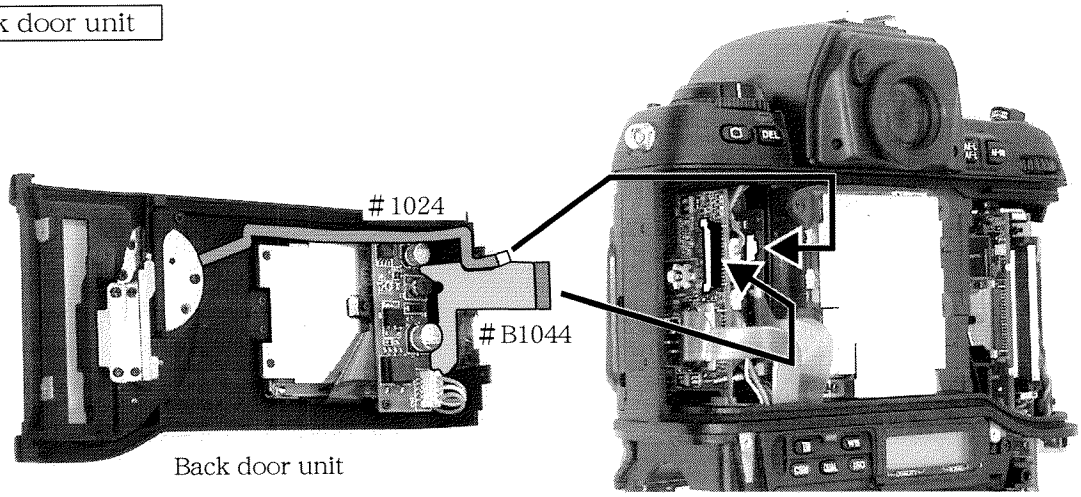

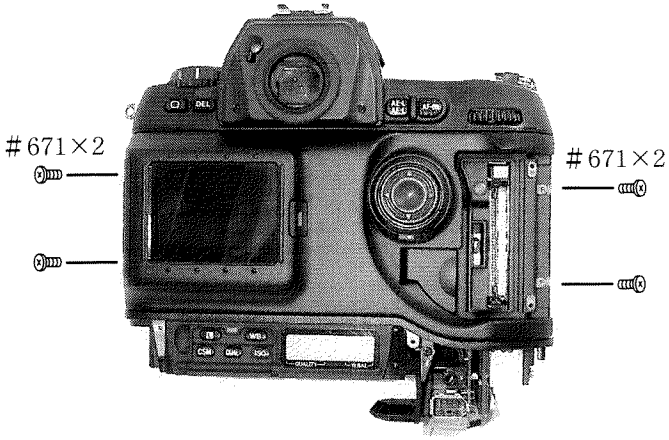

- Connect the FPC (#1024) to the film rewind relay FPC.
- Connect the FPC (#1044) to the TFT drive PCB.
- Install the back door assembly unit.
- Set the four screws (#671).

Bottom cover assembly unit

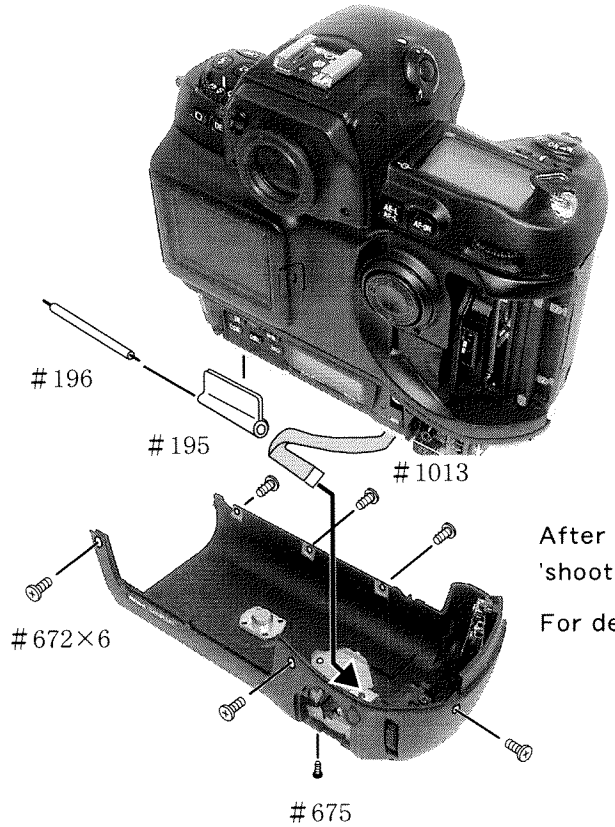

- Connect the FPC (#1013) to the connector of the bottom cover.
- Pass the shaft (#196) through the LCD cover (#195) and then install the shaft.
- Install the bottom cover assembly unit.
- Set the six screws (#672).
- Set the screw (#675).

After attaching the bottom cover unit assembly, conduct 'shooting image adjustment' and 'TFT adjustment'.

For details, refer to the page A31 and afterwards.

I/F connector blind plate unit

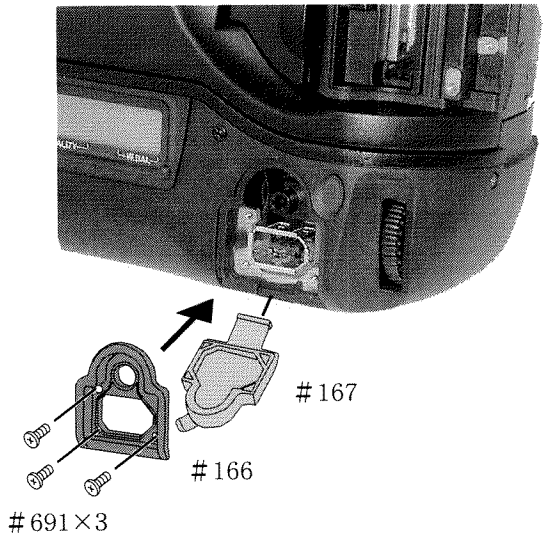

- Set the blind rubber (#167).
- Set the blind plate (#166).
- Set the three screws (#691).

Grip rubber unit

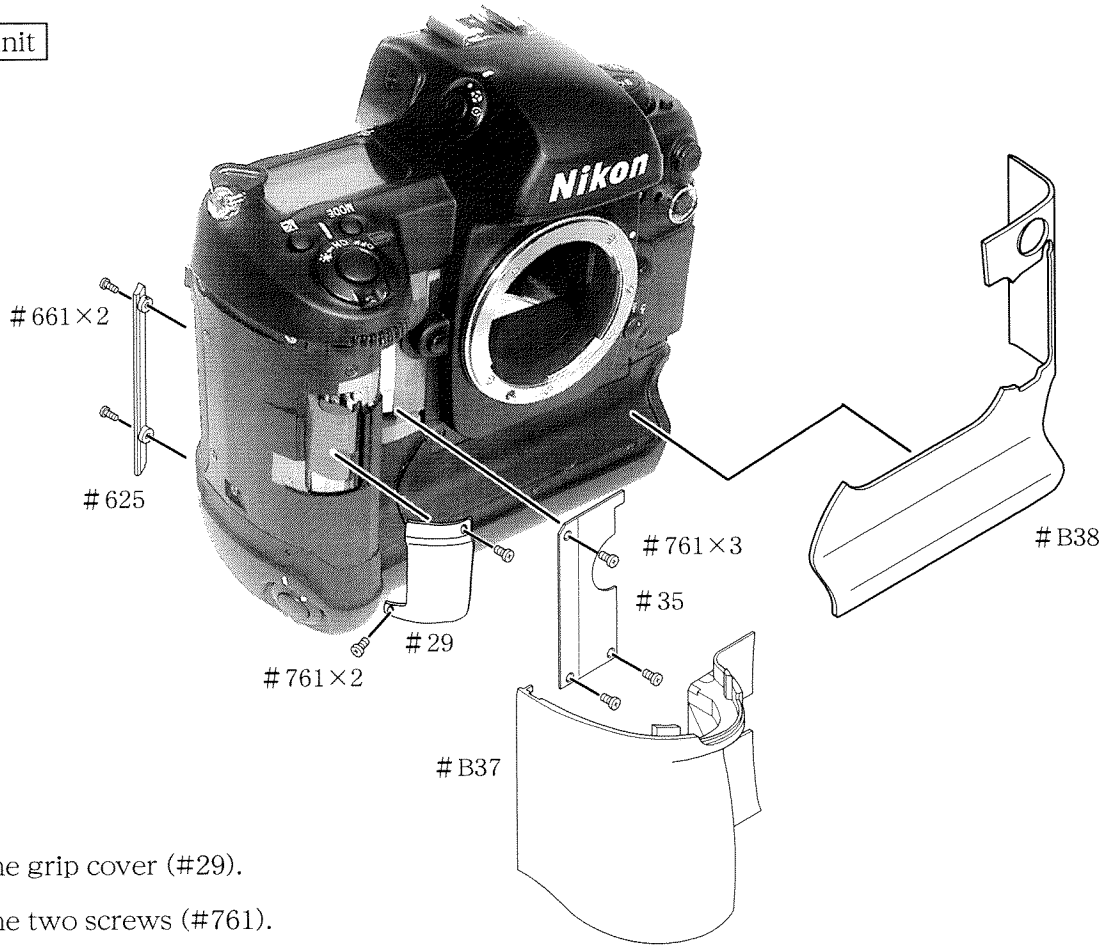

- Set the grip cover (#29).
- Set the two screws (#761).
- Set the acceptor (#35).
- Set the three screws (#761).
- Adhere the grip rubber (#B37).
- Set the grip rubber retainer (#625).
- Set the two screws (#661).
- Adhere the grip rubber (#B38).

C/F cover unit

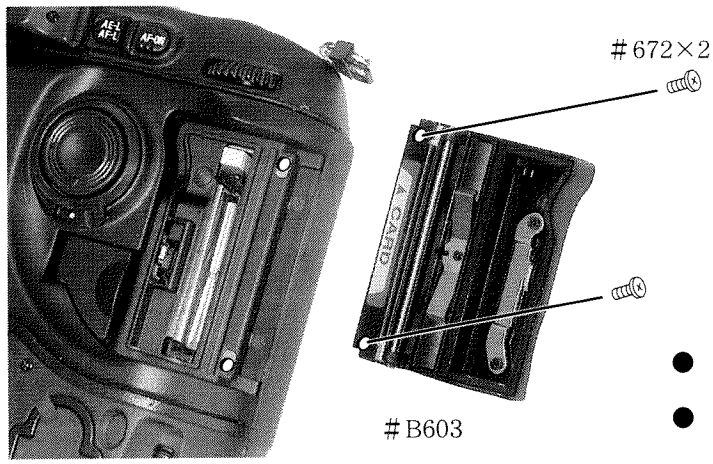

- Install the C/F cover unit (#B603).
- Set the two screws (#672).

Rating plate

- Attach the rating plate #25.

Adjustment through PC operation required at replacement of part(s)

1. For camera body

Items of adjustment / Parts replaced	AECCD 位置出し	Start from the adjustment for temp. detection voltage	AE accu-racy	Aper-ture accu-racy	TTL accu-racy	BC vol-tage	AF accu-racy
Shutter unit							
Main FPC unit		○	○	○	○	○	○
AF base plate unit							○
TTL SPD unit		○			○		○
DC/DC circuit board						○	
AE/Finder FPC	○		○				

How to replace the battery for backup

CAUTION

Danger of explosion if battery is incorrectly replaced.

Replace only with the same or equivalent type recommended by the manufacturer.
Dispose of used batteries according to the manufacturer's instructions.

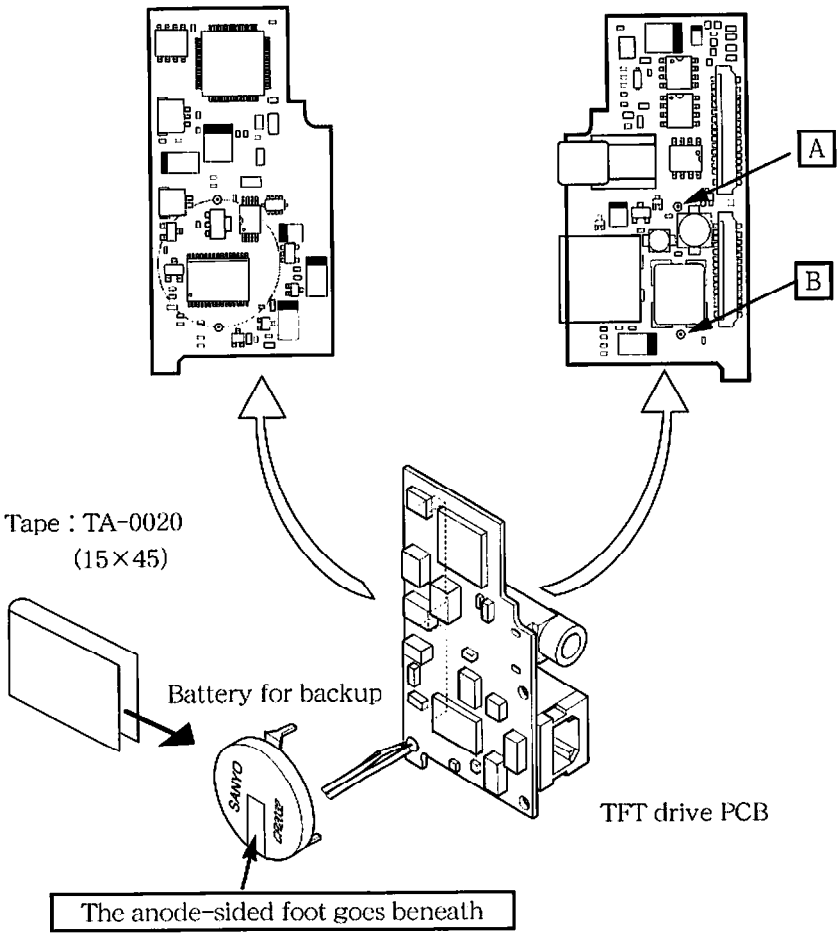

- Disassemble to the TFT drive PCB.
- Remove both solders [A] and [B] in the figure above, and then remove the exhausted battery for backup from the TFT drive PCB.
- Attach a tape on to the battery for backup for repair part.

Note : Using a tape, cover everywhere except the area where the solder is performed.

- Mount the battery for backup on the TFT drive PCB as shown in the figure above, and then solder it.

Shooting Image Adjustments

1. Overview of Adjustments

Be sure to perform the shooting image adjustments and TFT adjustments given in the following table when replacing the CCD block or PC board.

Brief descriptions of these adjustments are also given below.

	Shooting Image Adjustments			
	Sensitivity adjustment CCD GbGr level compensation Color sensitivity ratio adjustment	Open aperture sensitivity compensation	AE 1005 sensor color ratio compensation	Flash memory write operation
CCD block	○ * Assembly already adjusted	○	×	×
Compressed recording board	×	×	×	○
Main FPC	×	○	○	×
Finder Metering FPC	×	×	○	×
Mirror. finder screen	×	×	○	×

	TFT Adjustments	
	VCOM adjustment Picture angle adjustment	Flash memory write operation
Compressed recording board	×	○
TFT drive board	○	×
TFT LCD	○	×

(1) Shooting Image Adjustments

・Sensitivity adjustment

This adjustment is for calculating the gain setting for the CDS chip necessary to fix the G signal output for each ISO sensitivity (ISO200, 400, 800, and 1600) and then writing that value into the EEPROM on the TG board.

・CCD GbGr level compensation adjustment

GRGRG ← Gr Line

BGBGB ← Gb Line

This adjustment is for calculating the correction value necessary to correct for fluctuations of the G signal output caused by bleeding from R pixels and B pixels on each line and then writing that value into the EEPROM on the TG board.

・Color sensitivity ratio adjustment

This adjustment is for calculating the gain setting for the ASIC circuit necessary to achieve the same R and B signal level versus the G signal and then writing that value into the EEPROM on the TG board.

・Open aperture sensitivity compensation

This adjustment is for calculating the shutter time gain adjustment value used to correct for reduced CCD sensitivity when the aperture is opened by more than F2.8 and writing that value into the EEPROM on the main FPC.

・AE 1005 sensor color ratio compensation

This adjustment is for calculating the adjustment value necessary so that the color sensitivity ratio of each block of the 1005 sensor is fixed and writing that value into the EEPROM on the main FPC.

・Flash memory write operation

This procedure is for writing adjustment data written into the EEPROM on the TG board into the flash memory on the compressed recording board so that it may be used by the camera system. This operation must be performed whenever the compressed recording board is replaced.

(2) TFT Adjustments

・VCOM adjustment

For this adjustment, gray only is displayed and the brightness of the LCD display panel is measured using a luminance meter. VCOM is then adjusted to the point of minimum brightness.

・Picture angle adjustment

For this adjustment, a picture angle used for adjustment is displayed and the display position is adjusted so that the picture angle is contained in the TFT LCD window on the rear of the camera body.

・Flash memory write operation

This procedure is for writing adjustment data written into the EEPROM on the TFT board into the flash memory on the compressed recording board so that it may be used by the camera system. Just as with shooting image adjustments, this operation must be performed whenever the compressed recording board is replaced.

2. Materials Required for Shooting Image Adjustment

2-1. Materials to be used

- PC running DOS/V
- Shooting image adjustment software (Japanese version: J65033A, English version: J65033B)
- IEEE1394 board (Adaptec's AHA-8945, Japanese:J63060, English:J63061)
- AC adapter (Product diversion: EH-4)
- CF card (Product diversion: 30MB or more)
- IEEE1394 cable (SC-D1 or cable supplied with IEEE1394 board)
- Serial cable (Product diversion: For SC-EW2, E950/700)
- 10-pin cable (Product diversion: MC-31 plus RS-232C cable)
- Color viewer (DNP's CCV51F/V, 5100K: J63049)
- Luminance meter (Kyouritsu's BM300 or BM3000: J63068)
- Gray scale chart (DNP's standard HDTV gray scale: J63067)
- Colorbar chart (DNP's standard colorbar chart: J63053)
- Tripod
- Lens for shooting image adjustment (fixed aperture conversion type: J61185)
- 50mm/F1.4 lens (product diversion)
- ND1 filter (J63064)
- ND3 filter (J63065)
- Filter holder (J63066)

2-2. Required Operating environment for adjustment software

(1) PC

- Operating system: Windows 95/98, Japanese or English version
- CPU: Pentium II, 400 MHz or more
- Memory: 256MB or more
- Drives: Floppy drives x one or more
- Expansion slots: PCI x one or more
  ISA x one or more *A PC having two or more COM ports is not required
- Ports: COM ports x one or more

(2) Expansion boards

- IEEE1394 communications board (Adaptec's AHA-8945)
- RS232C expansion board *A PC having two or more COM ports is not required

(Example: For a Contec's COM-2PCF or equivalent product, the PC must accept one or more expansion communications boards and be settable to 9600 bps.)

Note: Install the IEEE1394 board according to supplied instruction materials.

Note: Install the expansion RS232C boards according to instructions in the corresponding Operation Manual.

2-3. Adjustment software installation method

Shooting image adjustment software is made up of the following two files. Prepare a folder for storing these two files on the PC and copy them into the folder created to install.

File configuration ImageAdj. EXE
Adjstandard. TXT
DI Drv. Dll

3. Preparations for Adjustment

3-1. Connection Diagram

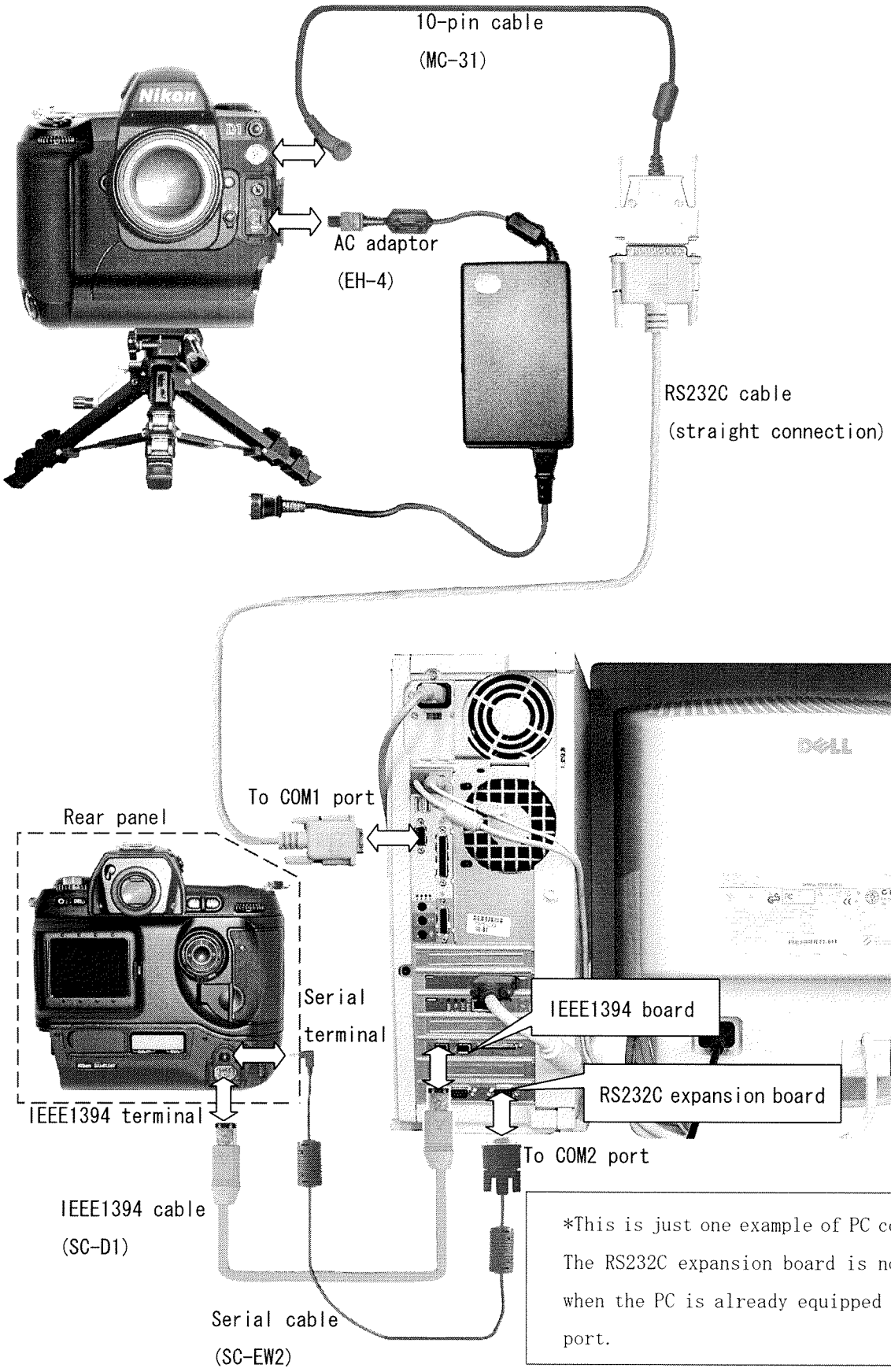

3-2. Tools

Adjustment and Inspection Items	Chart	Photographic distance	ND filter	Lens
Sensitivity adjustment	None	Distance 1	ND3	Lens for shooting image adjustment
CCD GbGr level compensation adjustment	Colorbar chart	Distance 2	None	Lens for shooting image adjustment
Color sensitivity ratio adjustment	None	Distance 1	None	Lens for shooting image adjustment
Open aperture sensitivity compensation	None	Distance 1	ND1 and ND3	Lens for shooting image adjustment
AE 1005 sensor color ratio compensation	None	Distance 1	None	Lens for shooting image adjustment
Shooting image inspection	Gray scale chart	Distance 2	None	50mm／F1.4

3-3. Chart

(1) Colorbar chart

DNP's standard colorbar chart

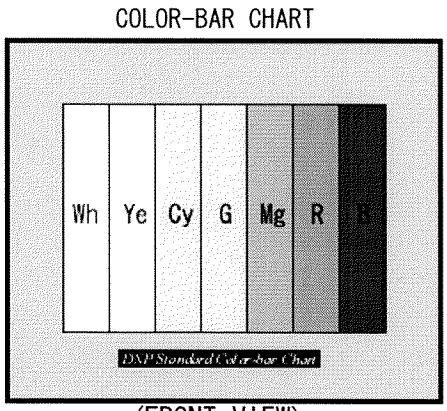

(FRONT VIEW)

(2) Gray scale chart

DNP's standard gray scale chart

Dimensions: Standard type, Pattern: HDTV gray scale

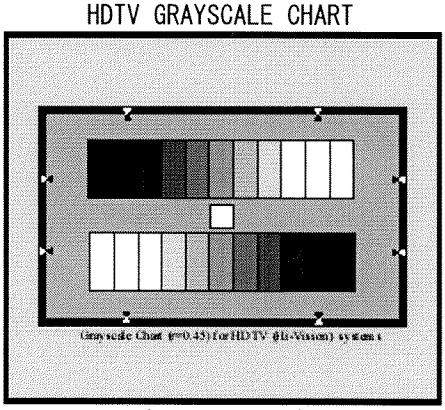

(FRONT VIEW)

3-4. Photographic Distance

(1) Distance 1

・Remove the chart from the viewer.

・Attach the lens for shooting image adjustment to the camera to be adjusted and set so that the center of the viewer luminance panel matches the height of the camera.

・Attach the front end of the lens to the viewer luminance panel.

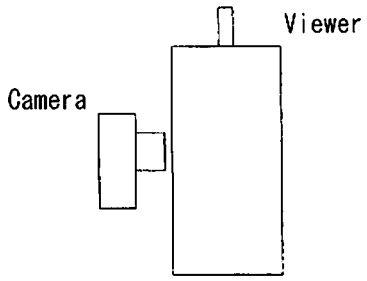

(2) Distance 2

・Adjust by sliding the chart position so that the chart effective panel and viewer luminance panel are positioned properly.

・Attach a lens for shooting image adjustment or 50mm/F1.4 lens to the camera and set so that the center of the chart and center of the lens face each other.

・Adjust the distance between the camera and the chart so that the vertical photographic image matches the vertical photographic range area of the chart and then focus.
(Note that the distance differs for the colorbar chart and gray scale chart.)

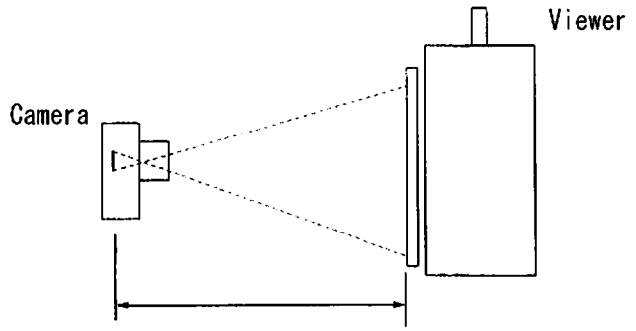

Camera-Viewer Distance: Approx. 0.6 M

(3) Picture angle when photographing the chart

Note: To prevent errors during adjustment, check the picture angle against the samples shown below before proceeding with adjustment.

D1 photographic image OK sample

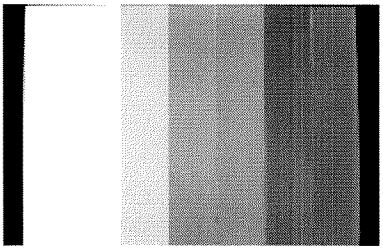

The top and bottom of the colorbar pattern match the picture angle.

Unacceptable image

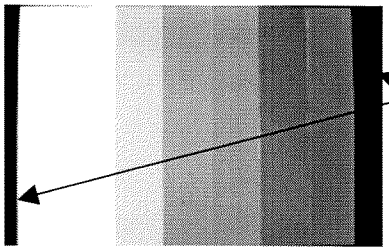

The black part of the left and right margins is not equal.

The chart center is incorrect.

D1 photographic image OK sample

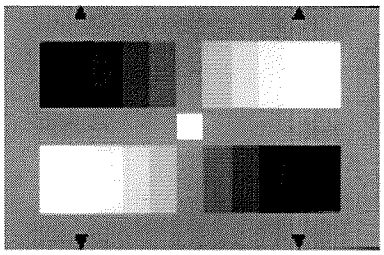

The indices for the vertical range match the picture angle.
The centers of the picture angle and chart match.

Unacceptable image

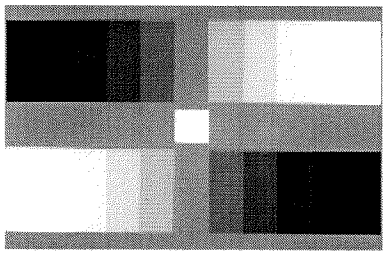

The photographic distance is incorrect.
Indices for the vertical range are vignetting only in the gray scale portion.

Unacceptable image

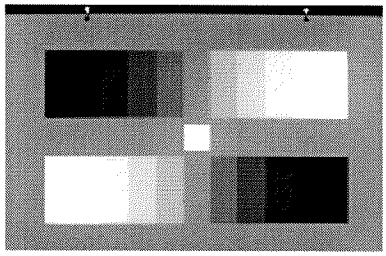

The picture angle is incorrect.
The indices at the bottom are not visible and the center is also incorrect in the horizontal direction.

3-5. Adjustment environment

(1) Brightness

Be sure to perform adjustment in a darkened room isolated from external light and position the camera so that light reflecting from the viewer surface and chart surface does not enter the camera lens.

(2) Temperature

Be sure that the ambient temperature around the equipment is 23°C +/-3.

3-6. Calibration of tools

Be sure to perform the following calibrations before performing adjustments.

(1) Brightness adjustment

Using the specified luminance meter, adjust the brightness of the viewer luminance panel to the following standard values.

- Turn on viewer power and perform about 30 minutes of aging.
- Remove the chart from the viewer and attach the luminance meter sensor to the center of the luminance panel.
- Reading the luminance meter, adjust the variable viewer brightness volume so that viewer brightness meets the standard value.

  Viewer brightness: LV13 +/-0.05

(2) Color adjustment

- Calculate the correction coefficient using a reference model and input to the adjustment software.
- Use the following values if you do not have a reference model.

  R: 1.00

  B: 1.00

(3) ND filter correction (only for new installs or when replacing the ND filter)

Input the correction value supplied with the ND filter and enter under standard settings of the adjustment software.

4. Using the Adjustment Software

4-1. Adjustment Flow

- Check the status of the adjustment jig.
- Connect the camera and the PC and turn on the camera's power.
- Start the adjustment software, select the adjustment item, and press the start button.
- Following the instructions on the menu, remove or insert the fixed aperture or filter and press the operation key.
- When the adjustment complete display appears, turn off the camera's power, and remove from the adjustment jig.

4-2. Startup Method

- The shooting image adjustment software can be started by executing the "ImageAdj.exe" file.
- The following menu will appear.

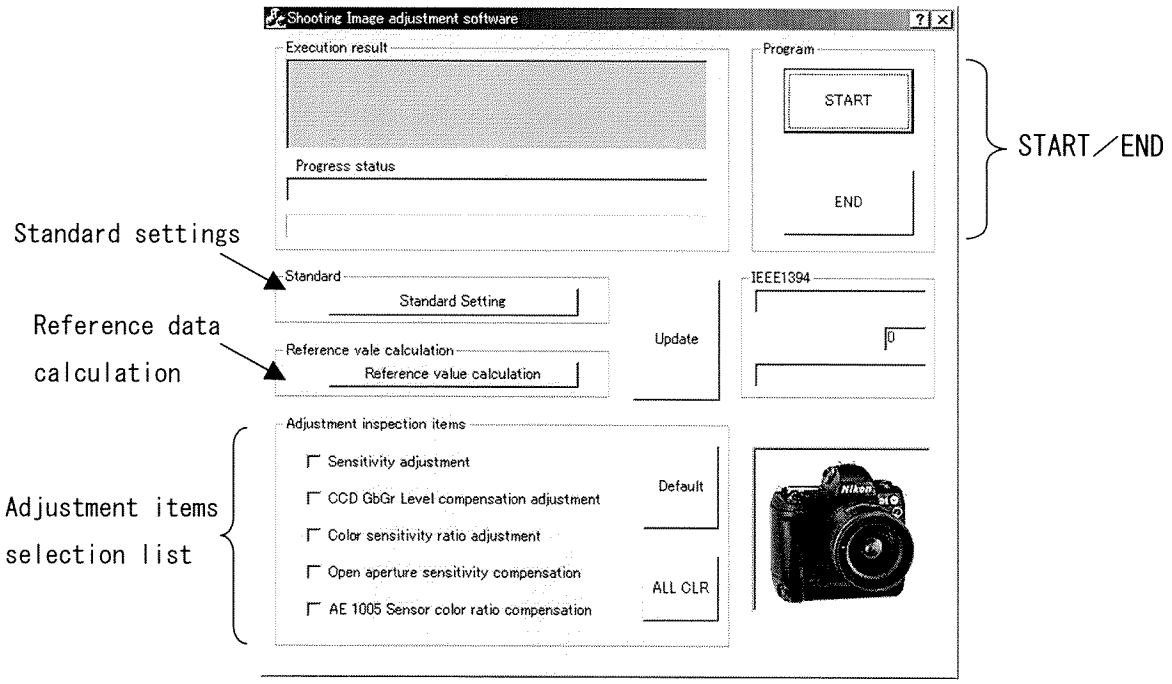

4-3. Adjustment items selection list

Although all the adjustment inspection items listed below are executed by the shooting image adjustment software as rule, it is possible to execute only the required adjustments.

Adjustment items	Sensitivity adjustment
	CCD GrGb level compensation adjustment
	Color sensitivity compensation
	Open aperture sensitivity compensation
	AE 1005 sensor color ratio compensation

It is possible to select and unselect any of the adjustment inspection items by clicking the mouse on the checkbox corresponding to the item in question.

The "Default" button is used to return the selection status of adjustment items to default settings.
The "ALL CLR" button is used to clear all adjustment items.

4-4. Standard Settings

Note: Be sure to enter the standard settings supplied with the ND1 and ND3 filter Under following procedure.

Note: Do not execute standard settings except during software installation. Other than the ND filter setting, do not change settings unless instructed to do so.

The standard settings function is used when changing standards and reference values required for each adjustment.

The standard settings procedure is given below.

(1) Press the "Standard Setting" button inside the main window.

(2) When the standard setting window opens, press the adjustment item button to change standards.

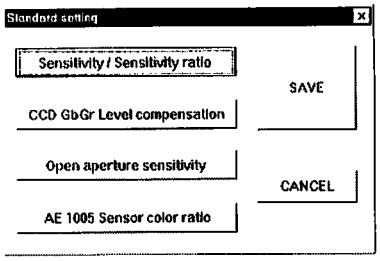

(3) When the standard setting window for the adjustment item in question opens, click the mouse on the desired standard value.

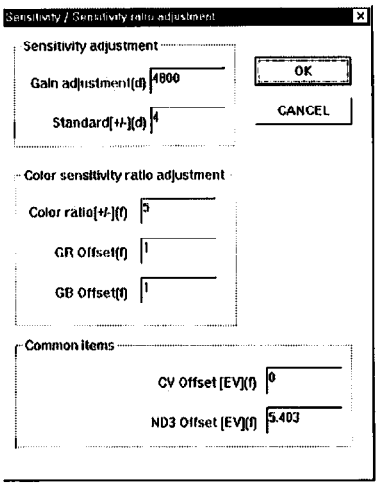

(4) Enter numeric values from the keyboard, and if okay, press the "OK" button. To cancel an entered value, press "CANCEL".

(5) Once standards are changed, press the "SAVE" button.
Standard values are saved in the file "AdjStandard.TXT" by pressing the "SAVE" button.

(6) If you wish to continue making changes, it is possible to repeat steps (2) through (5).

(7) To exit the standard settings window, press the "X" button in the upper right of the window or press the "CANCEL" button.

The contents of each standard settings window is given below.

▲Sensitivity/sensitivity ratio adjustment window

・Gain adjustment	Sensitivity target reference value: (decimal point format)
・Standard [+/-]	Sensitivity standard width: Unit [%]: (decimal point format)
・Color ratio [+/-]	Color sensitivity ratio standard width: Unit [%]: (decimal point format)
・GR offset	Color sensitivity ratio GR offset value: (decimal point format)
・GB offset	Color sensitivity ratio GB offset value: (decimal point format)
・CV offset	Lens offset when using a conversion lens: (decimal point format)
・ND3 offset	ND3 filter decay coefficient: Unit [EV]: (decimal point format)

▲CCD GbGr level compensation adjustment window

・Red area GR-GB	Red area standard value: Unit [%]: (decimal point format)
・Blue area GR-GB	Blue area standard value: Unit [%]: (decimal point format)
・X [TOP]	Specified coordinate position for X axis of each area: (integer format)
・Y [TOP]	Specified coordinate position for Y axis of each area: (integer format)
・X [WIDTH]	Specified coordinate width for X axis of each area: (integer format)
・Y [WIDTH]	Specified coordinate width for Y axis of each area: (integer format)

▲Open aperture sensitivity compensation window

・ND1 offset	ND1 filter decay coefficient: Unit [EV]: (decimal point format)
・Standard	F1.4 output ratio standard using F8 as standard: (decimal point format)

▲AE 1005 sensor color ratio compensation window

・Rg	Reference Rg: (integer format)
・Rr	Reference Rr: (integer format)
・Rb	Reference Rb: (integer format)
・Output level	Target output level for light measurement CCD

4-5. Color sensitivity ratio: Standard data measurement

> Note: Do not perform reference data measurement unless instructed to do so.
> It is only possible to measure reference data at a service center which has a reference body.

When adjusting the color sensitivity ratio, it is necessary to photograph the viewer to be used for adjustment with the reference camera body to find the color sensitivity ratio offset value from the RGB output at this time. This procedure is given here.

Be sure to perform all preparation for adjustment before performing this measurement.

Also, if conditions are such that viewer brightness will not change, this measurement can be performed just once at the beginning of adjustment.

(1) Apply power to the reference body.

(2) Set the reference body custom settings and BKT setting to default values.

(3) Change the reference body custom settings as shown below.

Custom settings
- 24-1
- 28-1
- 69-1

(4) Set the operation mode dial of the reference body to PC mode.

(5) Connect the SC-EW2 cable and IEEE1394 cable to the camera.

(6) Press the "Reference value calculation" inside the main window.

(7) From this point on, perform the measurement according to the instructions displayed in the window.

(8) "GR offset" and "GB offset" will appear on the screen. Set this value to the GR/GB offset for the sensitivity/color sensitivity ratio standard.

* Refer to the standard setting method for the setting procedure.

4-6. Adjustment Method

(1) Press the "START" button in the main window.

(2) Perform the adjustment according to the instructions on the screen.

(3) If there are no problems with the results of adjustment, "RUN CODE = OK" will be displayed on the upper left of the window. If the adjustment is no good, an error code of the form "RUN CODE = **" will appear.

(4) Remove the cables from the camera and end adjustment.

The sequential order of adjustment items to be executed during adjustment is as follows.

(1) Sensitivity adjustment

(2) CCD GrGb level compensation adjustment

(3) Color sensitivity compensation

(4) Open aperture sensitivity compensation

(5) AE1005 sensor color ratio compensation

5. TFT Adjustment

5-1. Material to be used

・Use the same materials, such as the power supply for the camera and PC as used for the shooting image adjustments. (Note that the IEEE1394 and 10-pin connector are not required for TFT adjustments. The viewer and charts are also not necessary.)

・Use a luminance meter (Kyouritsu's BM300 or BM-3000).

5-2. Installing adjustment software

・Create a folder on the PC harddisk and copy TFT_ADJ.EXE into that folder.

・Copy "MSCOMM32.OCX", "MSCOMJP.DLL" and "VB6JP.DLL" into the ¥WINDOWS¥SYSTEM directory.

5-3. Adjustment procedures

(1) Starting adjustment software

・ Connect a camera and PC and turn on camera power.

・Start TFT_ADJ and bring up the adjustment menu.

・Perform the following adjustments in order beginning from ①.

VCOM adjustment ①

NTSC picture angle adjustment ②

PAL picture angle adjustment ③

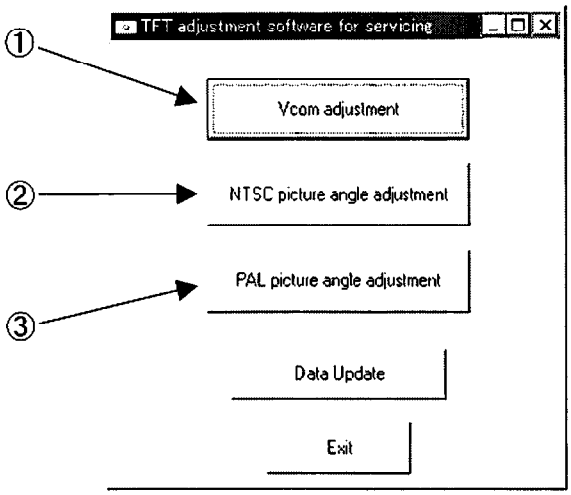

(2) VCOM adjustment

- Press the VCOM adjustment button on the main menu to bring up the VCOM adjustment menu.
- Apply the luminance meter to the center of the TFT LCD screen of the camera and read the value shown on the luminance meter.
- Press the "Decrement Data" button ①, vary the 20-point data ②, and select the point where the brightness value is minimized.
- Enter the selected point value into the data input textbox③, and press the "Write EEPROM" button ④.
- Press the "Return to menu" button ⑤to return to the main menu.

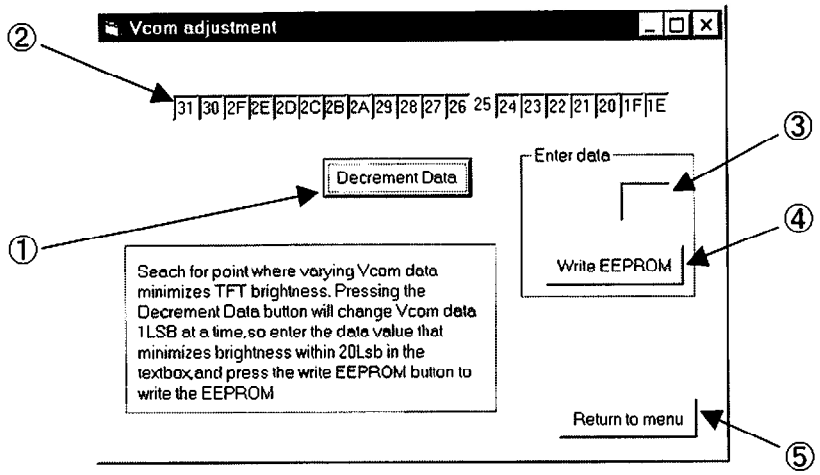

(3) NTSC picture angle adjustment, PAL picture angle adjustment

- Press the NTSC picture angle adjustment (or PAL picture angle adjustment) button on the main menu to bring up the picture angle adjustment menu.
- Of the frames displayed on the TFT screen, adjust so that only the inner frame is visible on the screen using the up/down and left/right buttons ①.
- Press the "Return to menu" button ②to return to the main menu. (Data will be automatically written to the EEPROM.)

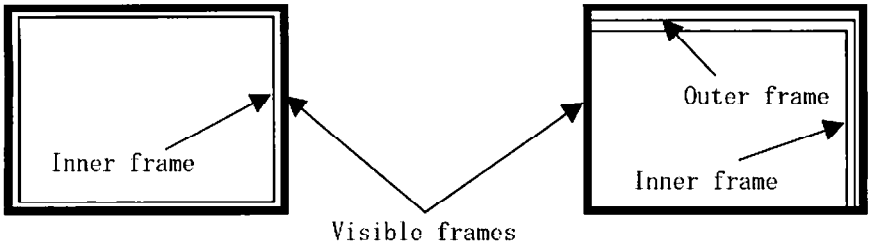

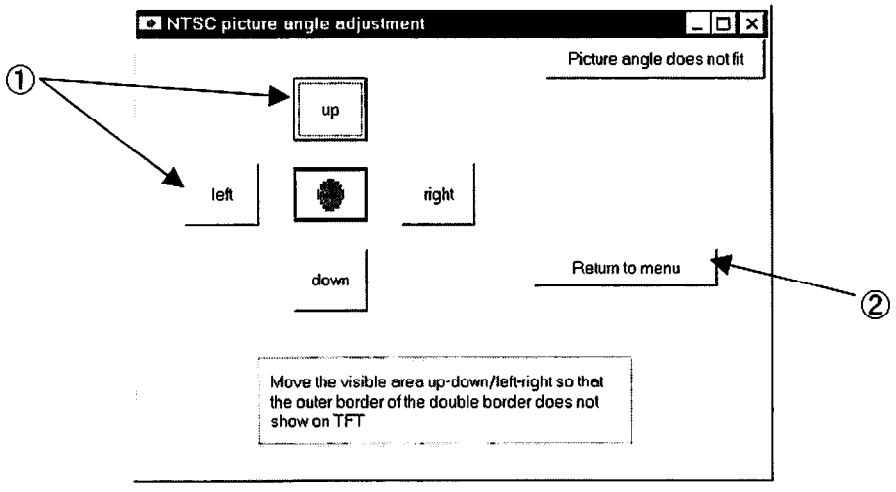

(4) Flash memory write operation

Note: Only perform this operation when replacing the compressed recording board. This operation writes adjustment data stored on EEPROM into flash memory.

- Press the "Data update" button ①.
- Press the "Exit" button ② to end adjustment.

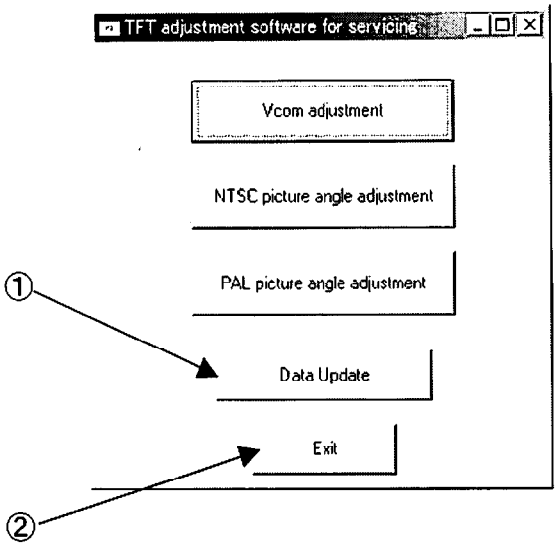

The inspection and cleaning of contamination / dust

1. How to inspect :

In the following conditions, get the D1-attached lens very close to the Color Viewer and take a picture of it.

Then, open the recorded image files through PC operation for visual check.

In the out-of-criteria case, refer to the page of 'Cleaning the CCD' in the D1's operation manual, and set the applicable product to the Custom Setting 8-1 and the bulb condition.

Then, clean it with a dust cleaner, or the alcohol and the paper wiper named Clean Wipe -P.

2. The tools to be used for the inspection :

*The D1 camera body

*105 mm / F2.8 micro Nikkor, or equivalent

*The CF card with 8 Mbyte or higher

*The AC adapter or a battery ;

The usage of battery is prohibited when cleaning due to theset conditions as mentioned above.

*The Color Viewer with no charts.

Set it to LV13 and leave it alone for approximately 10 minutes for aging.

*A personal computer / Macintosh or Windows 95 / 98 OS

*The application software Adobe's 'Photoshop' ver. 4.0 or higher.

*The card slot ;

Just in case of no card slot, also available through PC operation with the application software Nikon View DX in the configuration of the IEEE1394 board and a cable.

サービス計画課 M

3. Setting up the applicable camera :

*The single frame (S) shooting

*Manual focus ; Setting to 'Infinity focus mode' on the lens

*The A mode

*F16 for aperture

*±0 for compensation

*ISO 200

*Automatic White Balance mode

*Fine mode

*In the Custom-settings :

Refer to '23. Sharpening' in the manual and select the option No. 3, which is 'None', in the sharpening.

Besides, refer to '24. Tone Compensation' in the manual and select the option No. 1, which is 'Normal', in the Tone Compensation.

4. Criteria of contamination / dust :

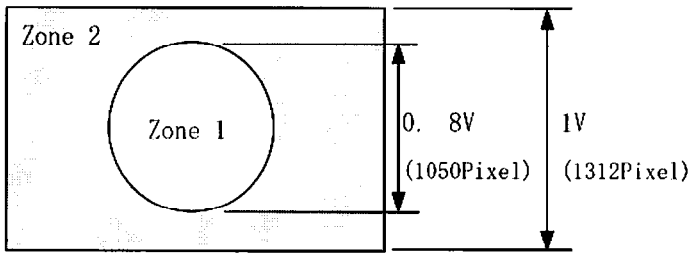

Recorded image(s)

*For the zone 1 :

Size : Less than 15 pixel

Quantity : Less than 2 pieces

Contrast : Less than 15% (※)

*For the zone 2 :

Size : Less than 15 pixel		Size : Less than 15 pixel
Quantity : Less than 6 pieces	OR	Quantity : Less than 2 pieces
Contrast : Less than 15% (※) ;		Contrast : Less than 25% (※)

In addition, the dust in the total quantity of less than 8 pieces shall be allowable.

サービス計画課 M

Note : Do not count the number(s) of dust if it is in the size of less than 20 pixel and the contrast of less than 5%.

The sizes shall be a root drawn from the formula of 'the longest diameter of the dust is multiplied by the shortest diameter of the dust'.

The distance from a particle to another should be taken at least 50 pixel or further.

※ The calculation for drawing the contrast

$$\text{Contrast} = \left(1 - \left(\frac{\text{Lowest luminosity level in the target dust}}{\text{Average luminosity around the target}}\right)^{\frac{1}{\gamma}}\right) \times 100\%$$

$\gamma = 0.6$

Enter the values to the following columns programmed for calculation in EXCEL file, which has been already provided to each local office / company overseas, and then draw the value(s) of contrast through the calculation.

The calculation for drawing the contrast		
Average luminosity around the target dust	=	
Lowest luminosity level in the target dust	=	
γ	=	0.6
Contrast	=	

5. Judging whether or not it is contamination / dust :

5-1. Opening the image files stored in the Photoshop

Check that the luminosity around the center of image is between 110 and 140.
For reference, its target value is 120.
If not achieved in this range of luminosity, additionally operate the exposure compensation and take a picture again.

サービス計画課 M

In addition, check the RGB level from 'Show Info.' in the Window menu.

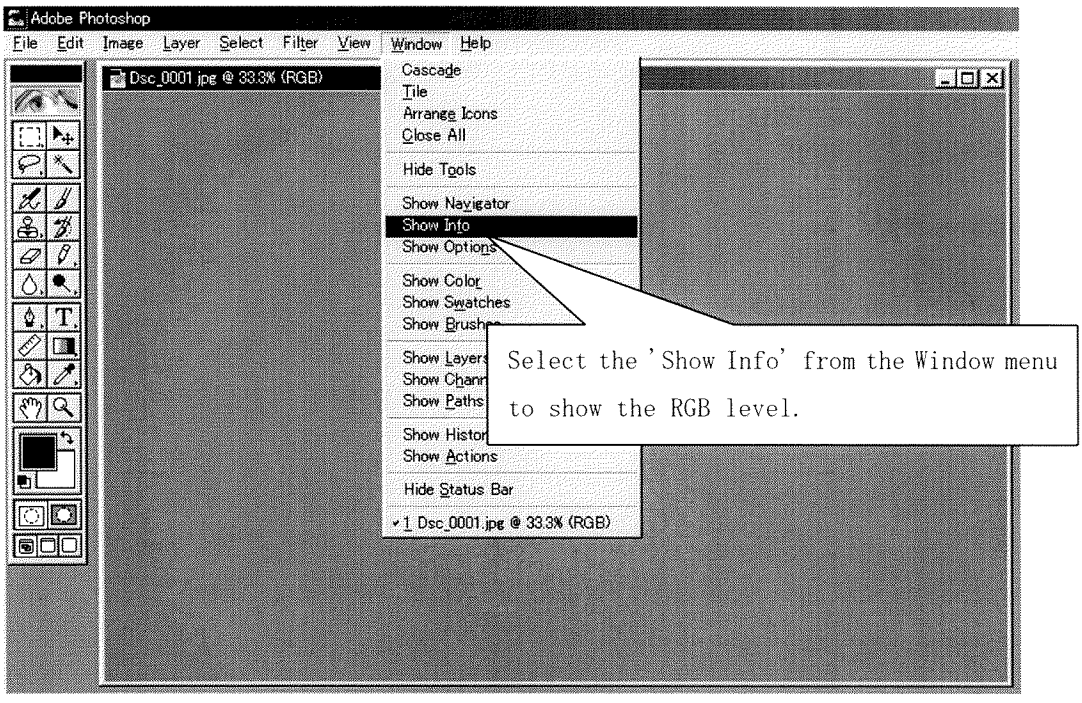

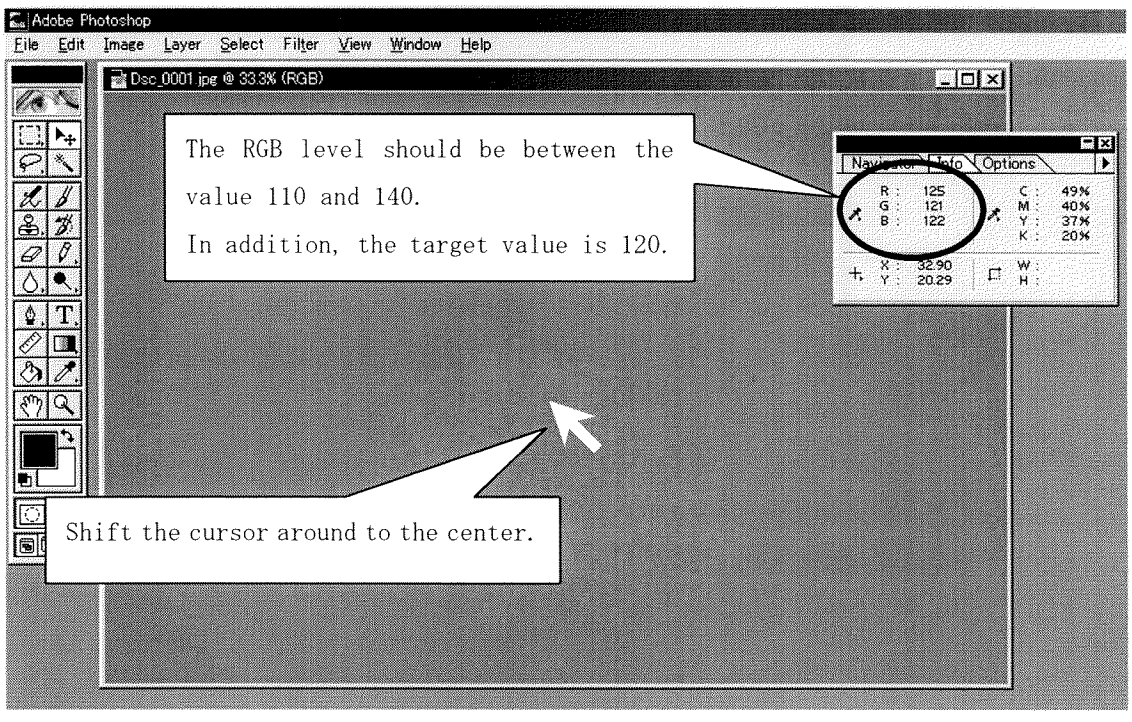

サービス計画課 M

5-2. Counting the quantity of dust in every zone :

For checking the sizes of dust, select the 'Elliptical Marquee Tool (M)', which is a circle' from the 'Rectangular Marquee Tool (M)', which is a square.
Then, double-click on the Elliptical Marquee Tool (M) and the Marquee Options just shows up.
In the Marquee Options, select the 'Fixed size' in the Style, and enter 15 (pixel) each to both the Width and Height columns.
Then, surround a target dust with a circle on the screen.
(Selecting the tool from the tool box : Select the 'Elliptical Marquee Tool (M)', which is a circle' from the 'Rectangular Marquee Tool (M)', which is a square.)

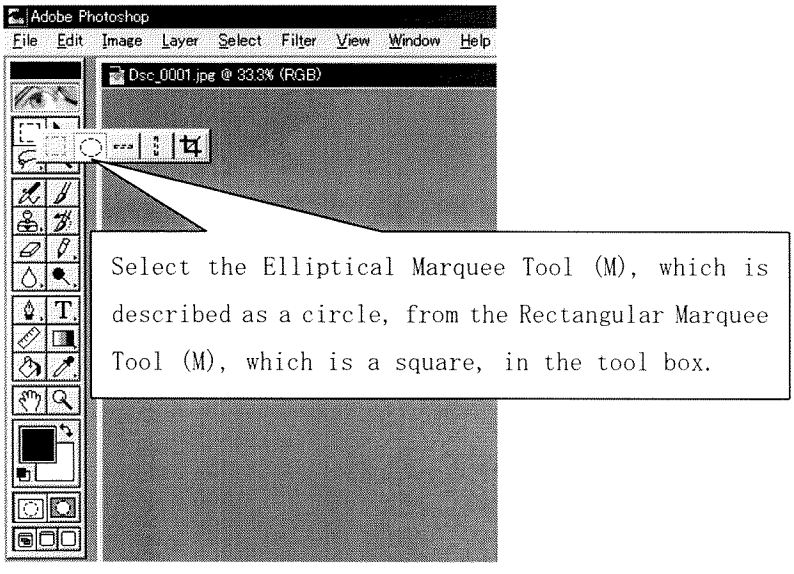

サービス計画課 M

(Double-click on the Elliptical Marquee Tool (M) and the Marquee Options just shows up. In the Marquee Options, select the 'Fixed size' in the Style, and enter 15 (pixel) each to both the Width and Height columns.)

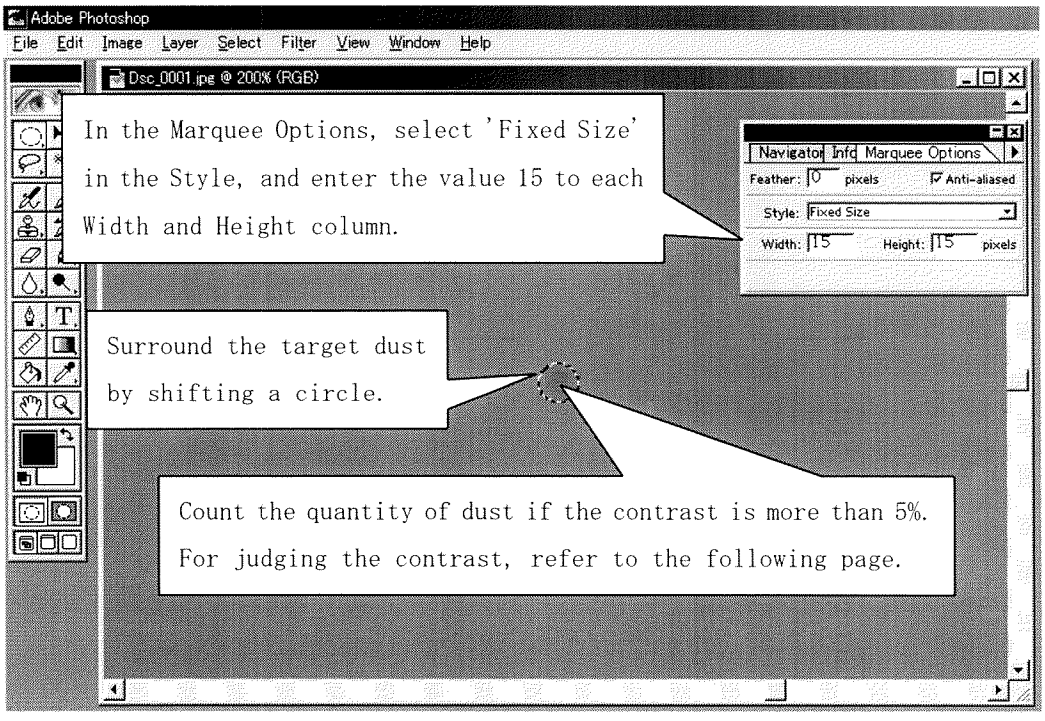

5-3. Observing the contrast of target dust :

Using the Histogram, compare the 'Mean' value to the 'Level' one, and then judge the contrast.

For checking the contrast, Double-click on the Elliptical Marquee Tool (M) and the Marquee Options just shows up.
In the Marquee Options, select the 'Fixed size' in the Style, and enter 64 (pixel) each to both the Width and Height columns.
Then, surround a target dust with a circle on the screen.

サービス計画課 M

(Double-click on the Elliptical Marquee Tool (M) and the Marquee Options just shows up. In the Marquee Options, select the 'Fixed size' in the Style, and enter 64 (pixel) each to both the Width and Height columns.)

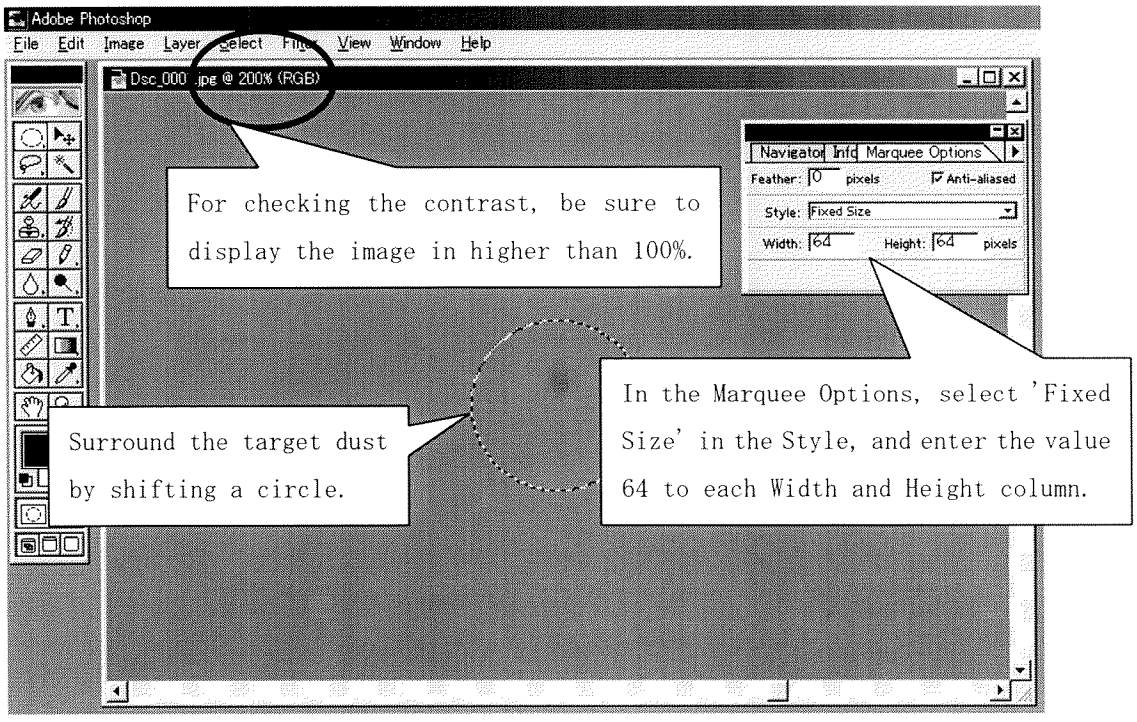

(Displaying the histogram : Select the 'Histogram' from the 'Image' menu.)

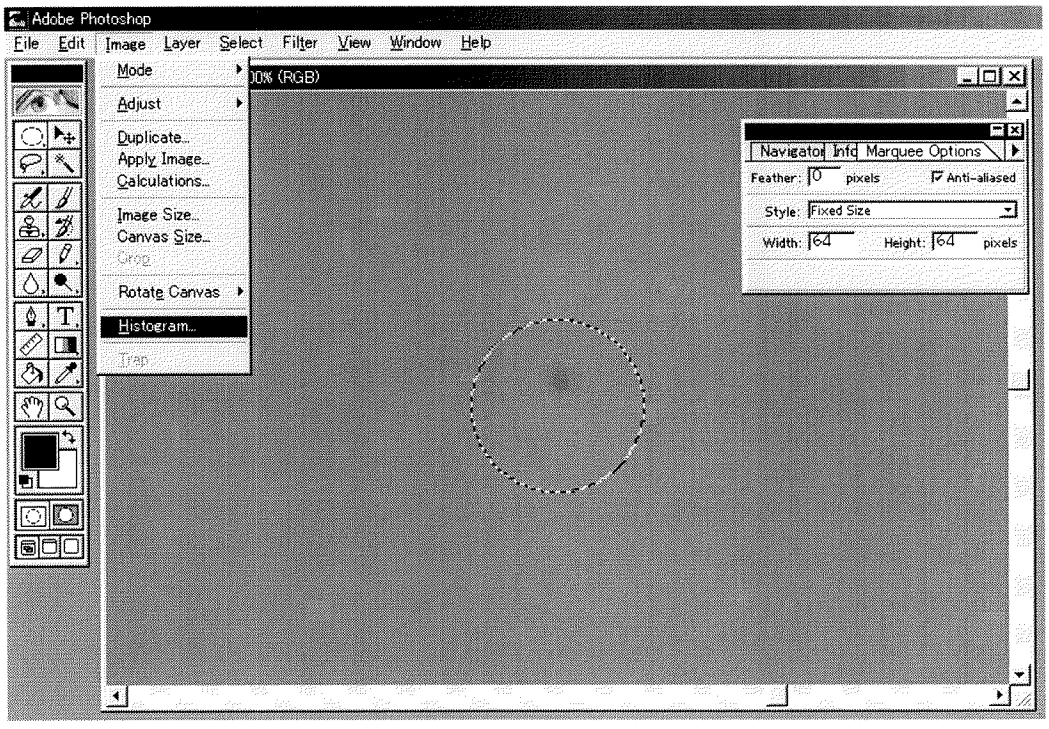

サービス計画課 M

(Drawing the value of contrast :

Shift a cursor to the lowest luminosity revel in the target dust in the graph of the histogram.

Then, read its luminosity, and, as shown in the item 4 'Criteria of contamination / dust', enter each value of 'the luminosity of highest density in the dust' and 'the average luminosity' to the appropriate columns in the formula for calculating and drawing the value of contrast.)

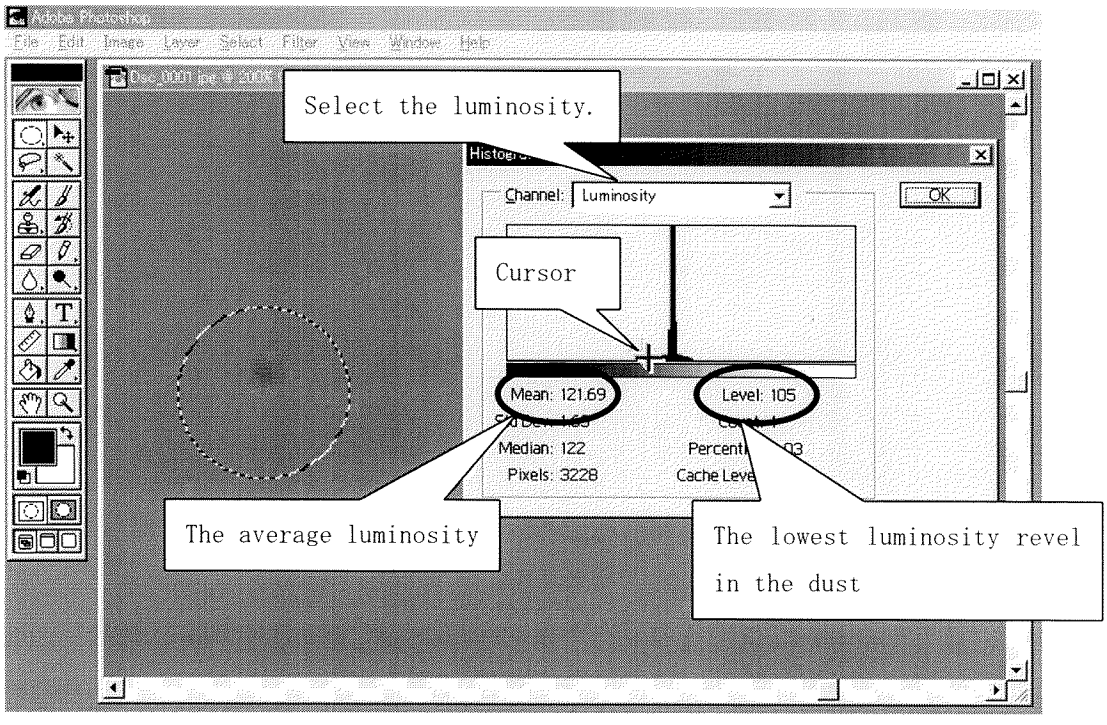

サービス計画課 M

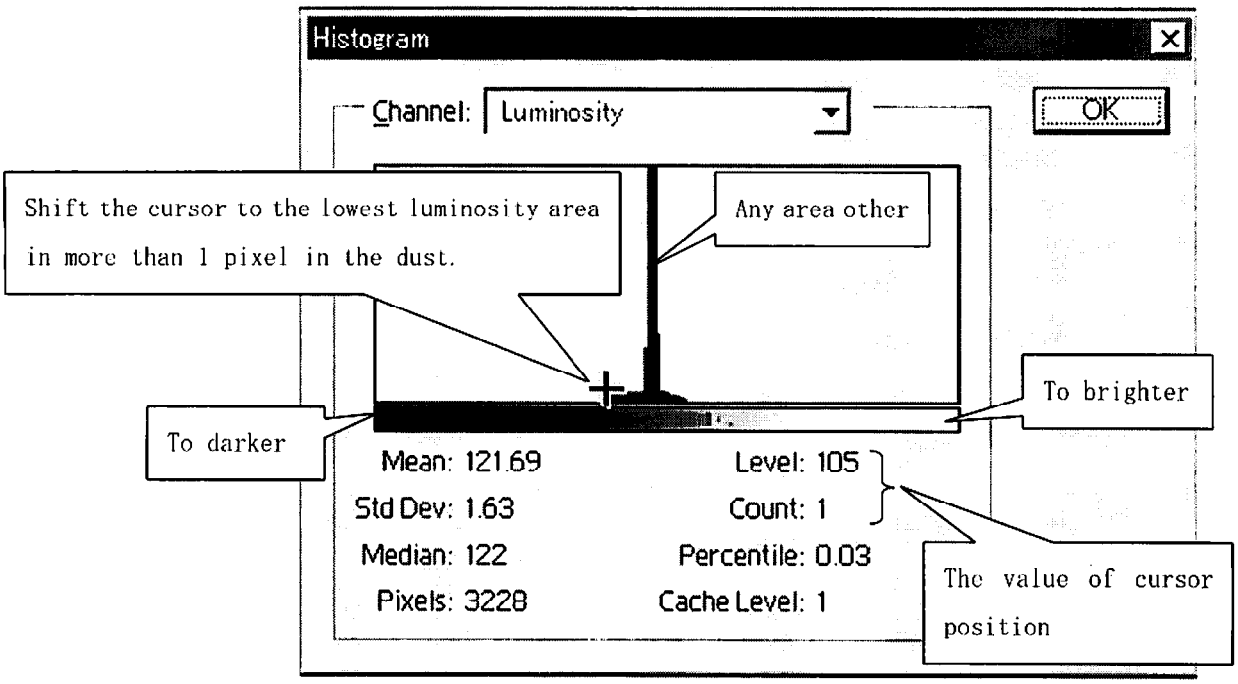

6. Wiping off the dust and cleaning :

*Remove the lens from the camera and then connect the AC adaptor with the DC input terminal.
*Select the Custom Setting 8-1(cleaning mirror up)
*Carefully observe the low pass filter by naked eyes or through a stereomicroscope of 8 magnifications, and check whether any contamination / dust exists on the filter or not.
*Clean the surface of filter with the dust cleaner J63072.

Note : If cleaning as any metallic particle(s) / dust still remains, the surface of filter may be scratched. In this accord, be aware of it when cleaning.

Note : In the usage of the dust cleaner J63072, place the tip of nozzle 5 mm close to the filter surface, and then spray the air to the center.
Then, be aware of the gas to begin to blow if inclining the dust cleaner while using it.

サービス計画課

As shown in the right figure, place the dust cleaner's nozzle horizontally straight to the center of filter of the camera, and then spray the air to it.

Since dust may get into the filter, pay attention in case of spraying the air around to the effective pixel area.

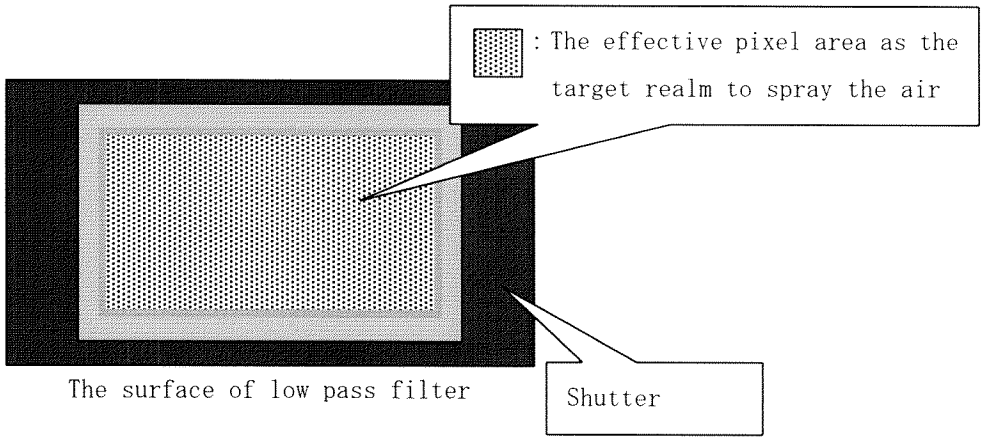

*Wrap the Clean Wipe -P J63073 around a stick and wipe off the filter with the alcohol.
*Using the blower or the dust cleaner J63072, clean the surface of filter again.
*Turn the main switch off, and then release the mirror-up mode.
*Conduct the test shooting and check that any dust(s) is(are) within the criteria.
Now, a series of the cleaning is complete.

サービス計画課 M

Where the dust / contamination is situated on the low pass filter

In case of finding a presence of dust on upper right of the low pass filter

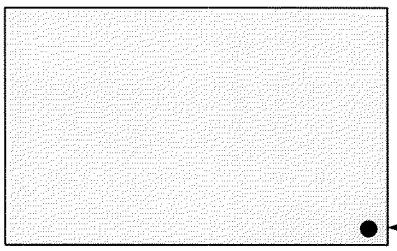

Recorded image(s) on a display

The position of dust is displayed upside down on the recorded image(s).

サービス計画課 M

INC

CCD SYSTEM

CCD PCB

JUPITER

CN3 — AWG28 — 2

CCD CONECTION FPC

CN1 LOWER CONTACT POINT — 20 — 20 — CN11 UPPER CONTACT POINT

CN2 — AWG28

φRG | LHφ | Hφ1 | Hφ2

TIMING GENERATOR FPC

CDS | GAIN-CONT | CL | A/D

V-DRIVE

Vφ1A	Vφ1C	Vφ3A	Vφ3C
Vφ1B	Vφ2	Vφ3B	Vφ4

TG

CN12 UPPER CONTACT POINT — TO COMPRESSION MEMORY PCB

CCD POWER SUPPLY PCB

CN13 — CN2

POWER_CONT
+17V
-9V
+5VA
+5VD
+3.3V
GND X4

CONNECTOR 20PIN

CHAK-1
TP1
TP2
TP3
TP4
TP6
DC-IN
BCHK
CHAK-0
BAT1
PGND1
TP7
TP8

2 — +6V, GND

CAMERA SYSTEM

FRONT COMMAND DIAL FPC ☆
- MAIN SW
- PRE-RELEASE SW
- RELEASE SW
- SUB COMMAND DIAL A
- SUB COMMAND DIAL B
- AF START
- ILLUMINATOR
- EXPOSURE COMPENSATION
- EXPOSURE MODE
- AE/AF LOCK

15

TOP COVER FPC

CN10 LOWER CONTACT POINT

- LOCK BUTTON
- CUSTOM SETTING BUTTON
- PHOTOMETRY DIAL BIT 0
- PHOTOMETRY DIAL BIT 1
- DRIVING SELECT DIAL

TRIPLE OPERATING FPC ☆
- AF AREA MODE
- BRACKETTING BUTTON
- SYNC. MODE BUTTON

4

SYNC. TERMINAL

22

f-f0 PCB ☆

LENS CONTACT FPC ☆

FLASH MEMORY WRITING FPC

20 — 10 — 30

FLASH MEMORY WRITING TERMINAL

METERING FPC

FD-MCU V850E/MS1 — ILX102K

LCD DRIVER LC75834W — IN FINDER LCD

XL4 — 6 — S.I-FPC ☆

4 — ILLUMINATOR LED ☆ SB-RDY

AF MODE SW FPC ☆

LENS RELEASE SW

AF MODE DIAL BIT0
AF MODE DIAL BIT1

2 — WL-AFSW0 WL-AFSW1 — AS1

CN5 LOWER CONTACT POINT — CN4 LOWER CONTACT POINT — FLASH MEMORY WRITING TERMINAL — WL-B-BAT WL-GND

REAR COMMAND DIAL FPC ☆
- MAIN COMMAND DIAL A
- MAIN COMMAND DIAL B

XL1 — 3

AF-P. IFPC ☆ — 5 — XL3

IF-IC M52966FP — SUB-MCU H8/3832S — EXTERNAL LCD — EXTERNAL EL

AF-M — 2 — WL1-AFMO1 WL1-AFMO2

MAIN-MCU H8S/2355 — REAL TIME CLOCK S-3511A

CN6 LOWER CONTACT POINT

MAIN FPC

CN1 LOWER CONTACT POINT — 8 — SQ-FPC ☆ SQ-P. I — 1 — SQ-SQ

CN2 LOWER CONTACT POINT — 38

WL-VBT6-2

POWER FPC

2 — SOLENOID

2 — SQ-M

AS2 — AS3

CN9 UPPER CONTACT POINT — CN7 UPPER CONTACT POINT — WL-EL1 WL-EL2 — CN8 UPPER CONTACT POINT — WL-PGND1 — XL2 — WL-PGND2 — WL-PGND3 — CN3 LOWER CONTACT POINT

14 — 12 — 21 — 20 — 20 — 2 — 20 — 10 — 11

10 PIN TERMINAL FPC — 1 1 — 1 1

TTL-FPC ☆ M52925FP

38

CN1 上接点 — CN4 — CN3 — AWG28 — AWG32

DC/DC PCB

VCC12
VCC5.25
VCC3.3
BAT3
VBT6B
VBT6B
DGND
Sig x 18

CN2 — VCC15.5 VCC5.25 VCC3.3 DGND Sig x 14

ROLL RETURN SIDE FPC

LCD Driver LC75833W

CN12 UPPER CONTACT POINT — CN14 UPPER CONTACT POINT — 34

CCD-RFPC ☆ ILX105

CCD-CFPC ☆ ILX107

CCD-WFPC ☆ ILX105

APERTURE FPC ☆
- APERTURE P.I
- PREVIEW SW1

2 — 2 — 2 — 2 — 2

PREVIEW SW2

APERTURE MG

SHUTTER FPC ☆ — 6 — 5

SHUTTER PCB
- 1STMG
- 2NDMG
- CURTAIN SW

MIRROR LATCH MG

AF SELECTOR FPC
AF AREA SELECTOR
上 左 下 右

5

BOTTOM COVER FPC

CN13 UPPER CONTACT POINT — 6

- VERTICAL RELEASE SW
- VERTICAL PRE-RELEASE SW
- AF START SW
- VERTICAL COMMAND DIAL A
- VERTICAL COMMAND DIAL B
- LOCK SW

REAR DISPLAY FPC

- COMPRESSION MODE BUTTON
- WHITE BALANCE MODE BUTTON
- SENSITIVITY SELECTOR BUTTON
- DELEATE BUTTON
- MONITOR ON/OFF BUTTON

REAR LCD
REAR EL

2

NOTE: ☆ MARKS ARE COMMON WITH F100

EXPLANATION OF CONNECTION'S MARK

—— FPC	◎ PRESS CONTACT	▯ CONNECTOR
---- LEAD WIRE	○ SOLDER	▯ CONNECTOR ON BOARD

D1 BLOCK DIAGRAM

D SYSTEM
MEMORY PCB
SUPPLY PCB
RA SYSTEM
MINATOR LED
DY
FPC
DIAL FPC
AND DIAL A
AND DIAL B
SQ-SQ
SOLENOID
SQ-M
OC PCB
OR
OR ON BOARD

TG CONNECTION FPC
32
BATTERY RELEASE SW
BATTERY PACK
Ni-MH 1.2VX6
CHAK-1
TP1
TP2
TP3
TP4
TP6
DC-IN
BCHK
CHAK-0
BAT1
PGND1
AWG32
AWG24
AWG28
AWG36
2
4
3
1
DC/IN
RISC SYSTEM
BACKUP BATTERY
CN105
CN104
CN106
TFT DRIVE PCB
VTR
JACK
TFT CONNECTION FPC2
CN101
LOWER CONTACT POINT
CN103
LOWER CONTACT POINT
TFT
CONTROLLER
LEVEL SHIFT
CN102
VIDEO OUT
DISPLAY LCD
CONNECTION FPC
LOWER CONTACT POINT
CN1
28
7
TFT UNIT
INVERTER
PCB
5
CN1
UPPER CONTACT POINT
TFT CONNECTION FPC1
CN301
UPPER CONTACT POINT
CN104
LOWER CONTACT POINT
CN101
LOWER CONTACT POINT
COMPRESSION MEMORY PCB
ASIC
μBGA
64MDRAM
x8
VIDEO
CONTOROLLER
OSCILATOR
27MHZ
RISC
BGA
64MDRAM
x2
16MFLASH
MEMORY
OSCILATOR
4MHz
CF LED
CN303
&
CN302
50
CARD CONNECTOR
CN4
CN3
CN2
CN102
VCC15.5
VCC5.25
VCC3.3
DGND
Sig x 14
CONNECTOR
40PIN
I/F FPC
CN103
LOWER CONTACT POINT
36
PC I/F PCB
IEEE1394
CONTOROLLER
RS-232C
OSCILATOR
24.576MHz
6
CN101
IEEE1394
CONNECTOR
3
CN102
SERIAL
CONNECTOR

INC

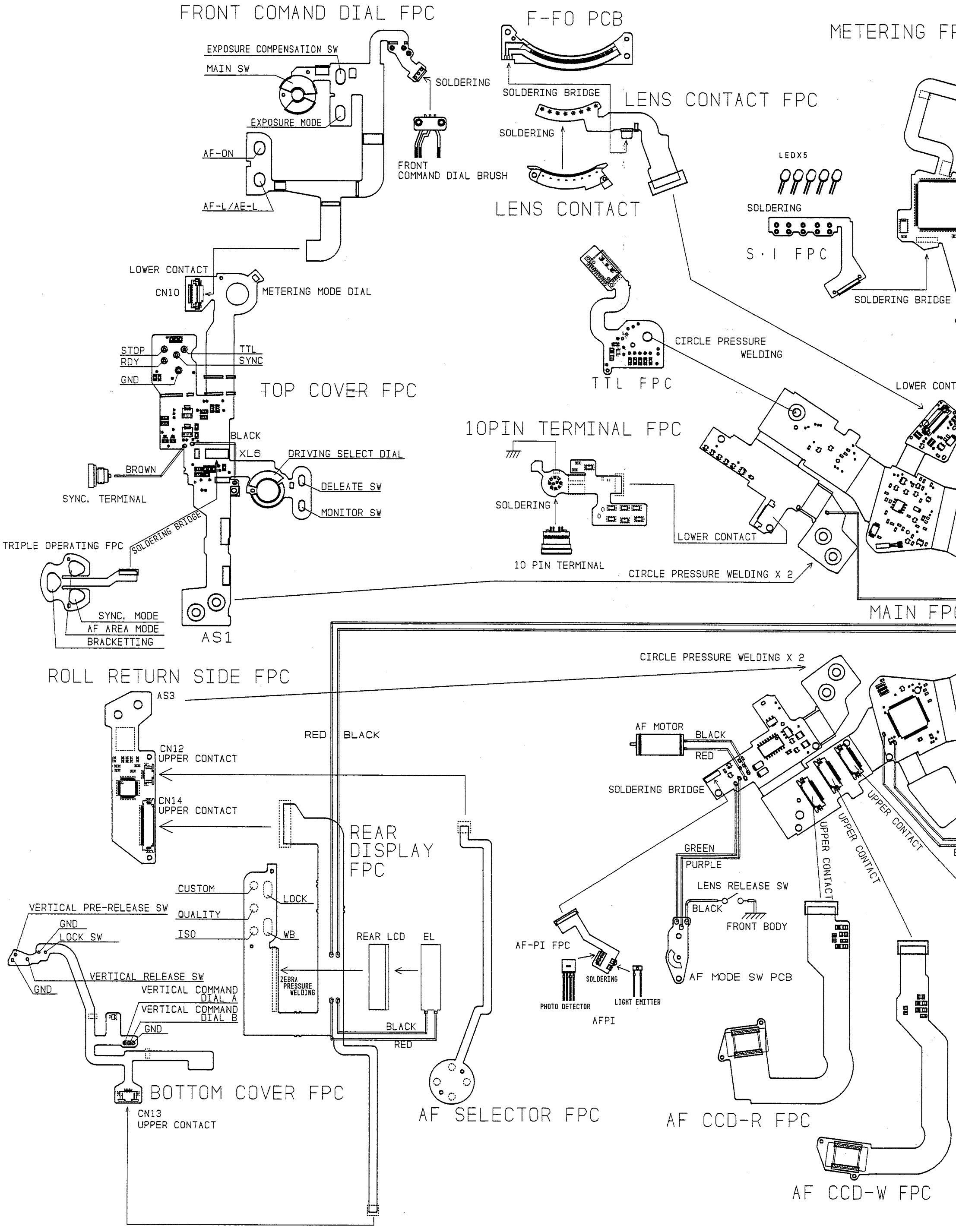

Additional page

NG FPC

ILLUMINATOR LED
SOLDERING
'IN-F LCD
ZEBRA PRESSURE WELDING
G BRIDGE
FLASH MEMORY WRITING TERMINAL
OWER CONTACT
SOLDERING
ZEBRA PRESSURE WELDING
EL
EXTERNAL LCD
LOWER CONTACT
RED
BLUE
TO TFT DRIVE PCB
CN106

MIRROR LATCH Mo
GRAY
ORANGE
APERTURE Mo
ORANGE
GRAY
APERTURE PI
SOLDERING
MIRROR LATCH SW
APERTURE FPC

REAR CD BRUSH
SOLDERING
SOLDERING BRIDGE
SOLDERING BRIDGE
REAR CD FPC

SEQUENCE PI
SOLDERING
BLUE
SEQUENCE SW
SEQUENCE FPC

N FPC
LOWER CONTACT
LOWER CONTACT
LOWER CONTACT
POWER FPC
SOLENOID
YELLOW
YELLOW
TO DC/DC PCB
CN1
GREEN
RED
BLACK
SEQUENCE MOTOR

SOLDERING BRIDGE
PURPLE
SHUTTER FPC
SHUTTER UNIT

FPC
AF CCD-C FPC

実体配線図　WIRING

サービス計画課 M

NOV-17-1999

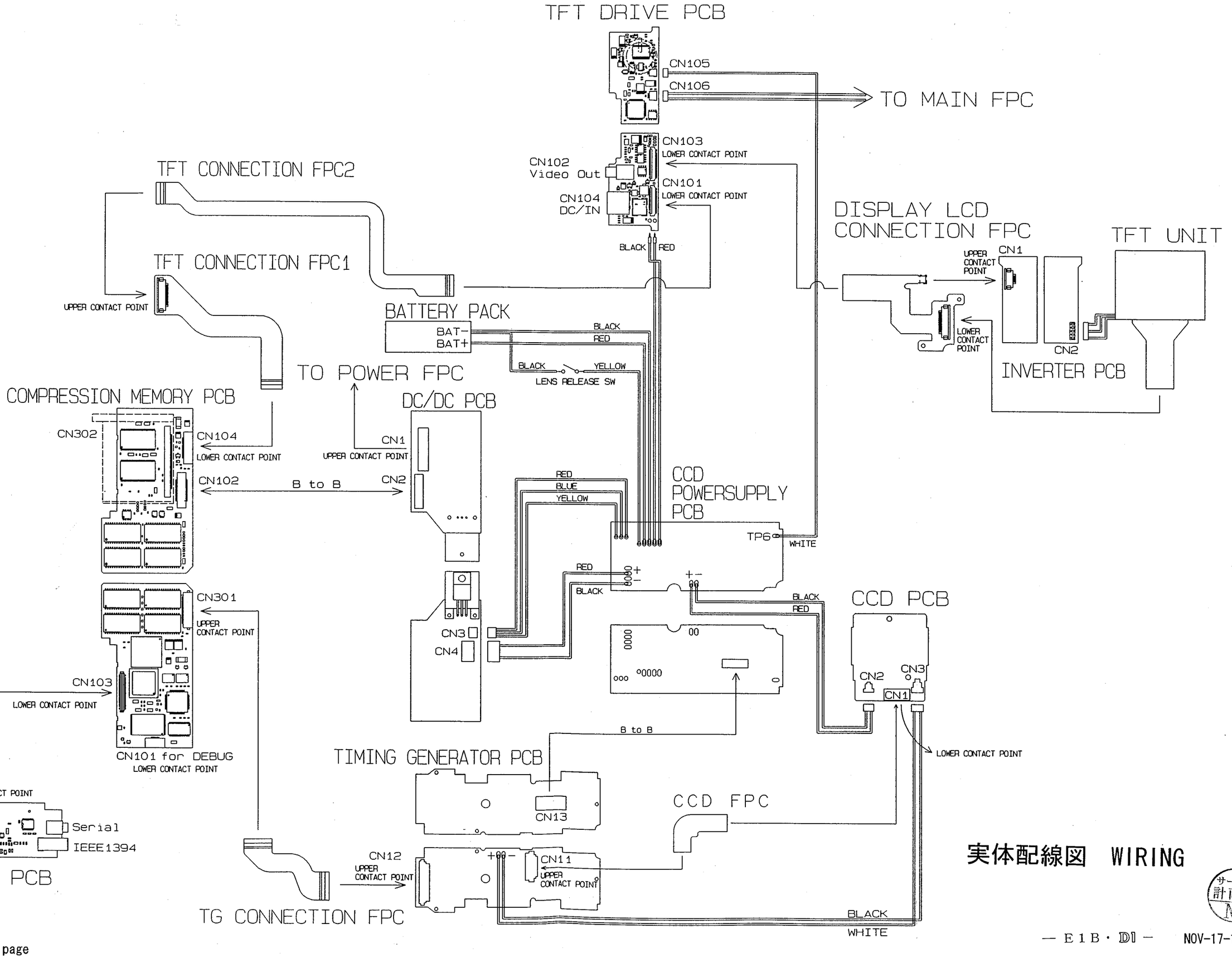

実体配線図 WIRING

Additional page

NOV-17-1999

CAMERA SYSTEM CIRCUIT DIAGRAM

INC

Top cover FPC

TRIPLE OPERATING FPC

Front CD FPC

10 pin terminal FPC

AF-PIFPC

AF MODE DIAL PCB

LENS CONTACT FPC

Finder/metering FP

Main FPC

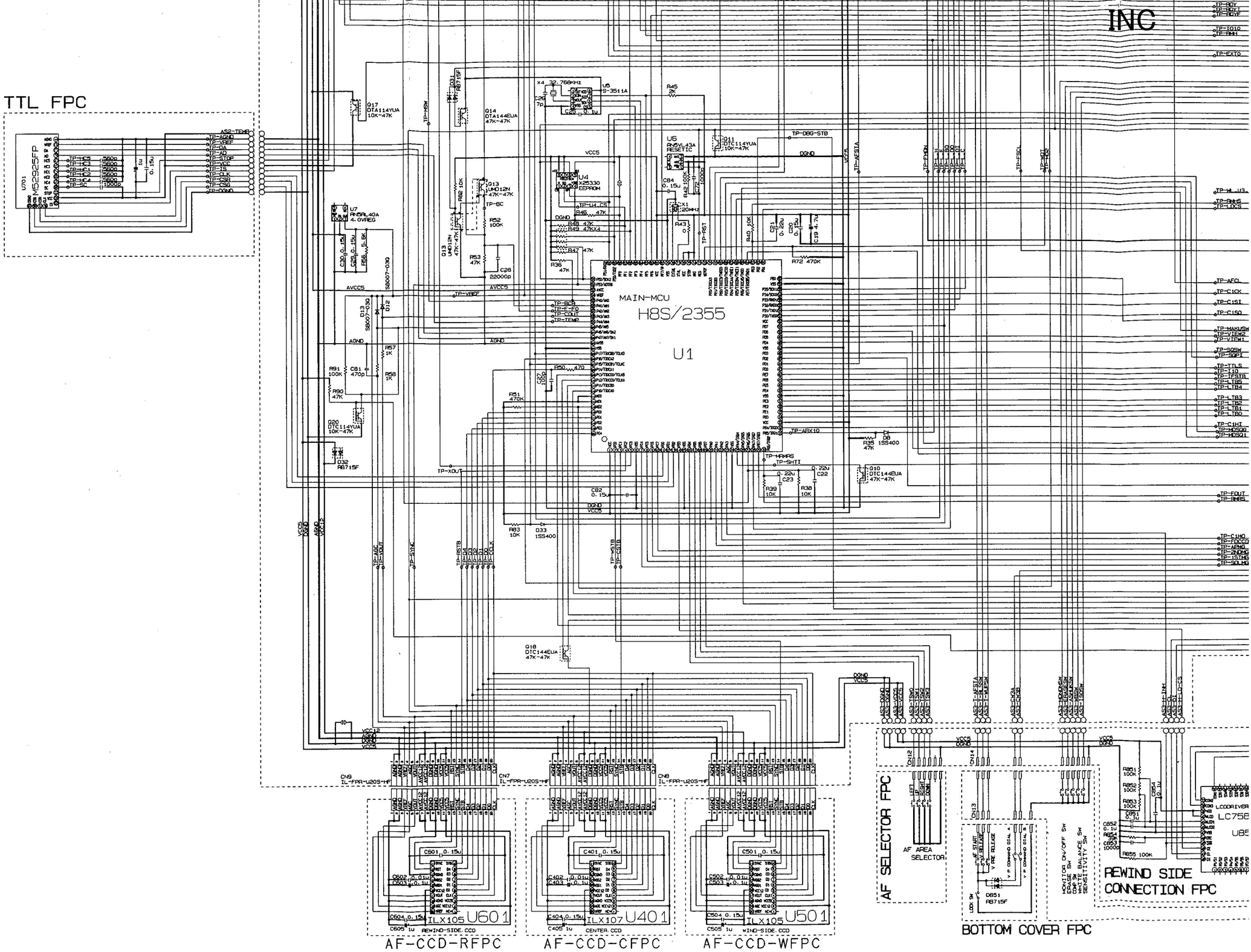

INC
TTL FPC
MAIN-MCU
H8S/2355
U1
AF-CCD-RFPC
AF-CCD-CFPC
AF-CCD-WFPC
AF SELECTOR FPC
BOTTOM COVER FPC
REWIND SIDE
CONNECTION FPC

Finder/metering FPC

Main FPC

FD-MCU
V850E/MS1
U301

SUB-MCU
H8/3832S
U2

LCDDRIVER
LC75834W
U302

U10
SP4423ACU
EL-DRIVERIC

EL

EXTERNAL LCD
1/4-1/3

In-f LCD 1/4-1/3

S·IFPC

Superimpose LED

U305
ILX102

U11
RN5RL45A
4.5VREG

U12
RN5VL36A
RESETIC

X301
8.6MHz

X3
32.768KHz

D301
DA227

Q1
DTA144EUA
47K-47K

Q2
DTA123JUA
2.2K-47K

Q3
2SA1037K

Q7
2SA1797

Q8
DTC143ZUA
4.7K-47K

Q9
2SA1037

D3
FC804

D302
RB715F

D303
98007-030

CN4
IL-FH32S-HF

SB-RDY

TP-ILLED

TP-VLCD

TP-VDDIN

TP-VDD

TP-LCD

TP-EXT1

TP-EXT2

TP-ASCI

TP-U10-P3

TP-EXTRG

TP-HSIN

TP-VSIN

TP-DCLK

TP-RSET

TP-HITO

TP-ILVCO

TP-ROUT

TP-GOUT

TP-VSCL

TP-LENSE

TP-VLCD2

TP-VLCD1

TP-VCC

TP-VCC12

TP-VREF

TP-VOUT

TP-SYNC

TP-AGND

TP-INT

TP-VSCIN

TP-VCC5

TP-HCK

TP-DGND

TP-DSIN

TP-GSM

TP-VCOM

TP-VCOMDC

TP-VCOM14

TP-VCC

TP-VCC12

TP-VCC5

TP-VDD

TP-VLCD

TP-VLCD2

TP-VLCD1

INC

I/FIC
M52966FP
U3

REAR COMMAND DIAL FPC

SEQUENCE FPC

POWER FPC

DC/DC PCB

REWIND SIDE
CONNECTION FPC

REAR PANEL FPC

APERTURE FPC

SHUTTER FPC

SHUTTER PCB

Rear LCD
1/3-1/3

LC75833W
U851
LCDDRIVER

BACKUP BATTERY

SOLENOID

SQ MOTOR

TO MAIN FPC

TO DC/IN VIA
CCD POWER PCB

TO BATTERY PACK
VIA CCD POWER PCB

パワーFPC
POWER FPC

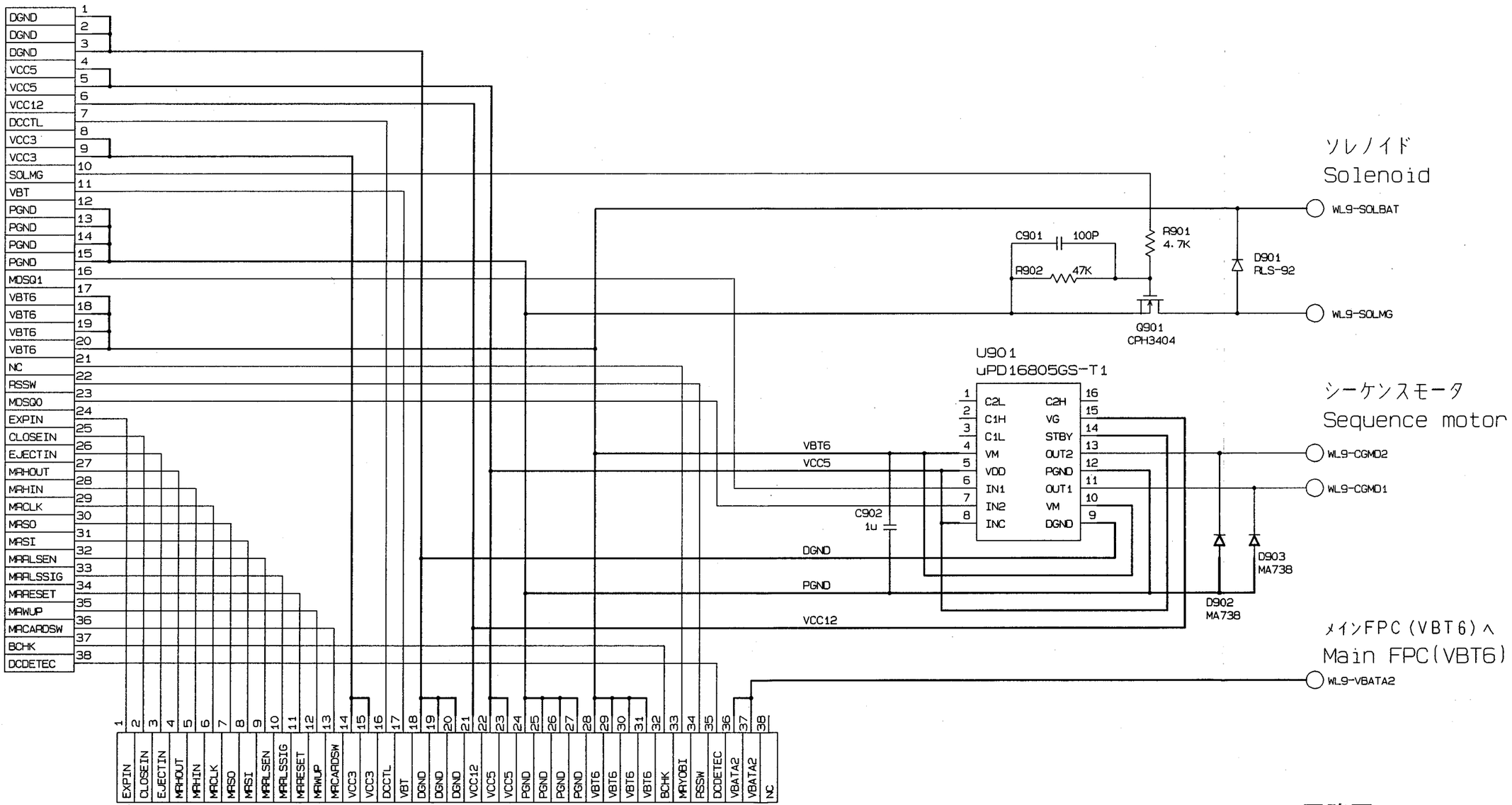

回路図
Circuit diagram

パワーFPC
POWER FPC

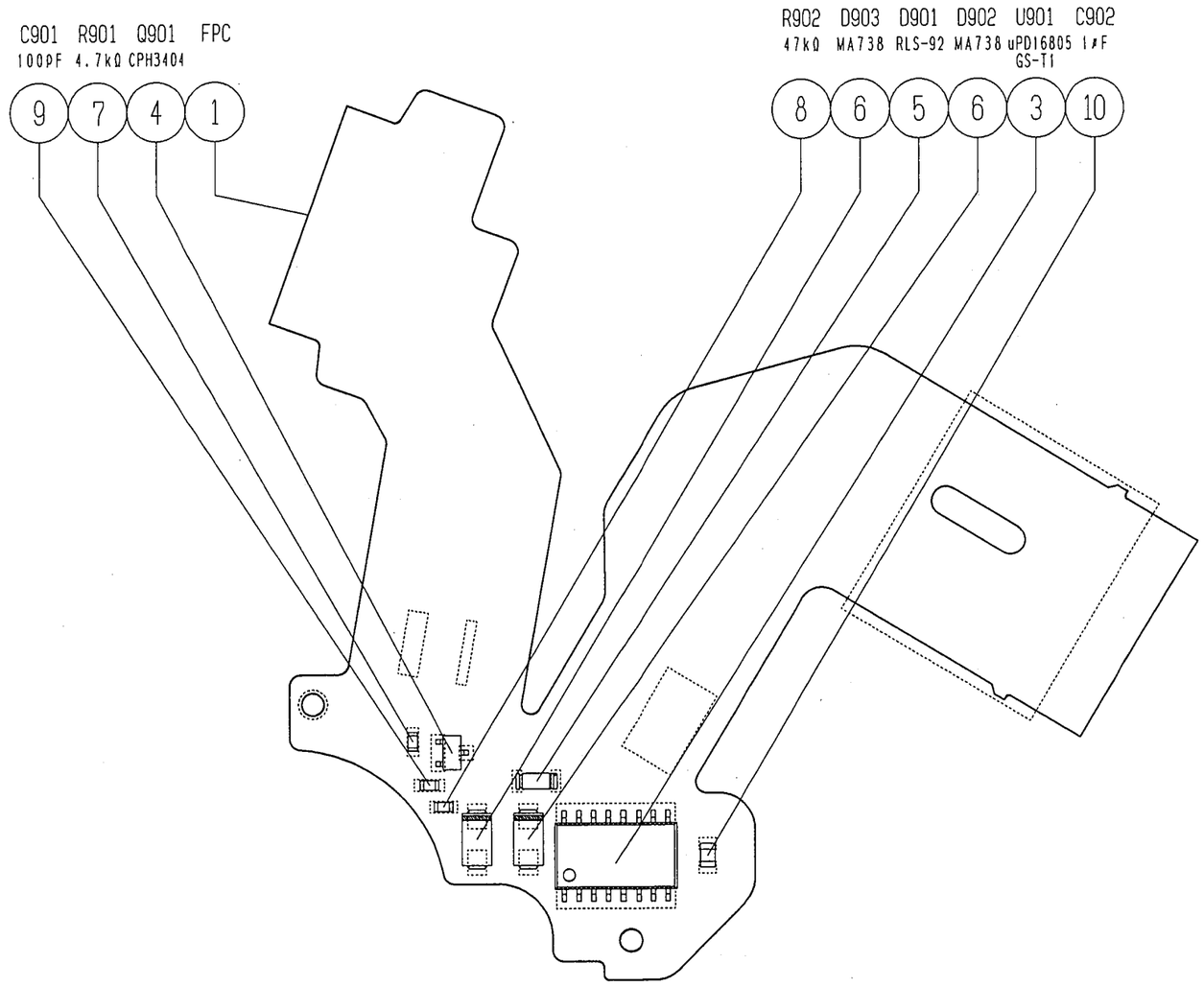

表面部品実装図
Surface parts mount figure

パワーFPC
POWER FPC

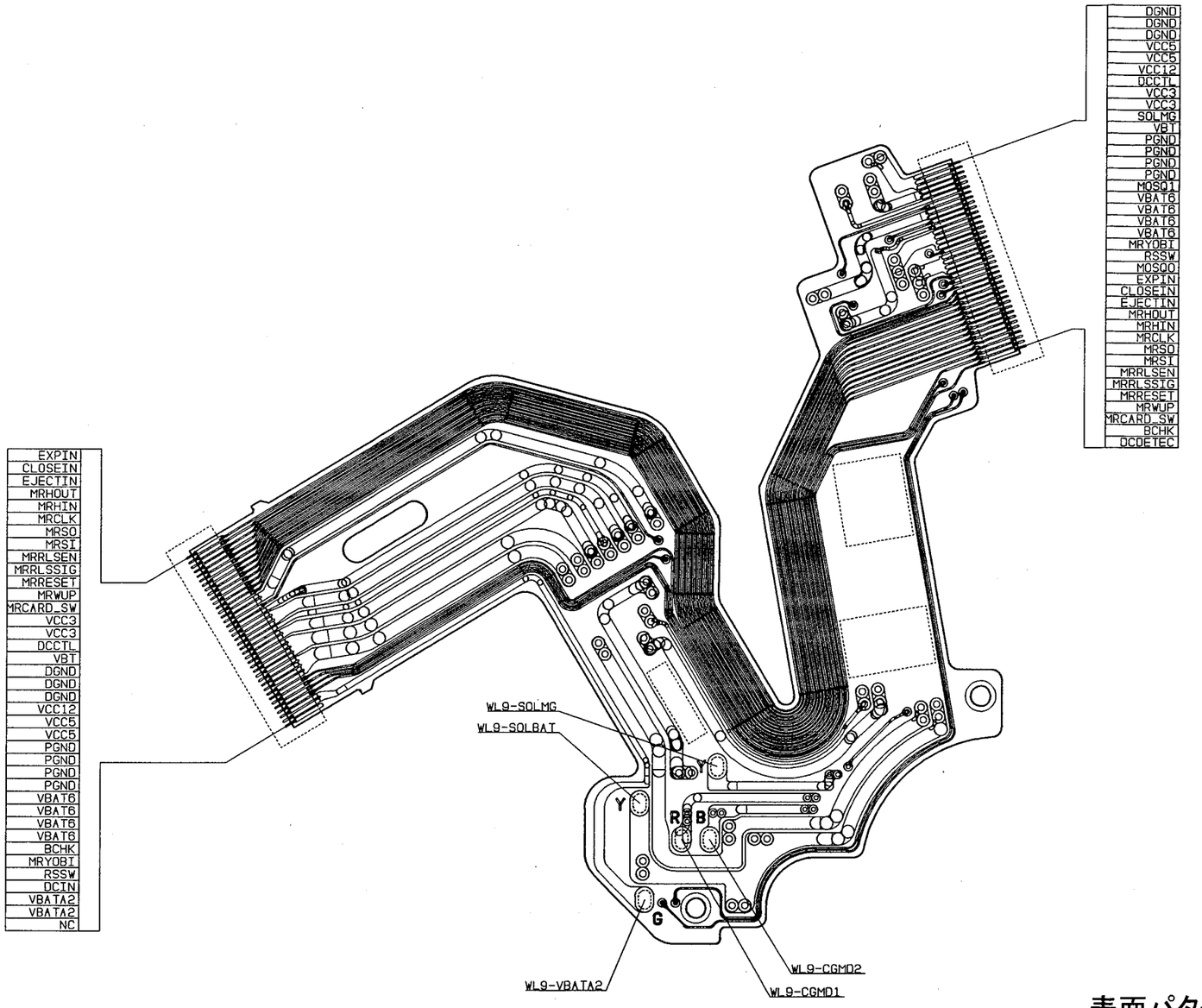

表面パターン図
Surface pattern figure

CCD基板
CCD PCB

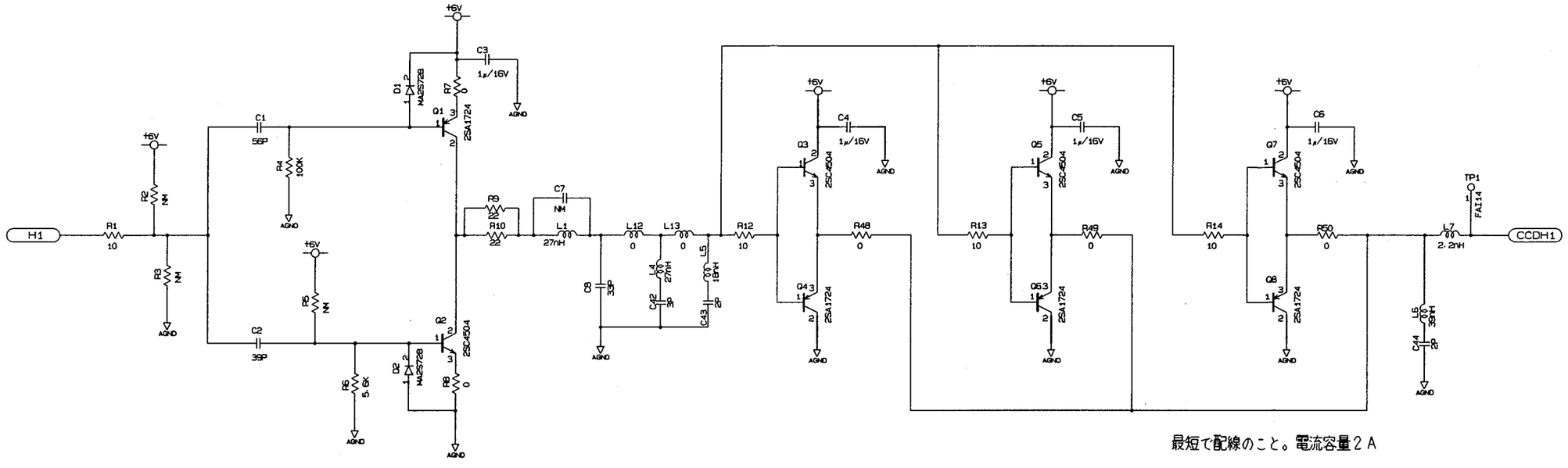

最短で配線のこと。電流容量２Ａ

回路図(1)
Circuit diagram (1)

CCD基板
CCD PCB

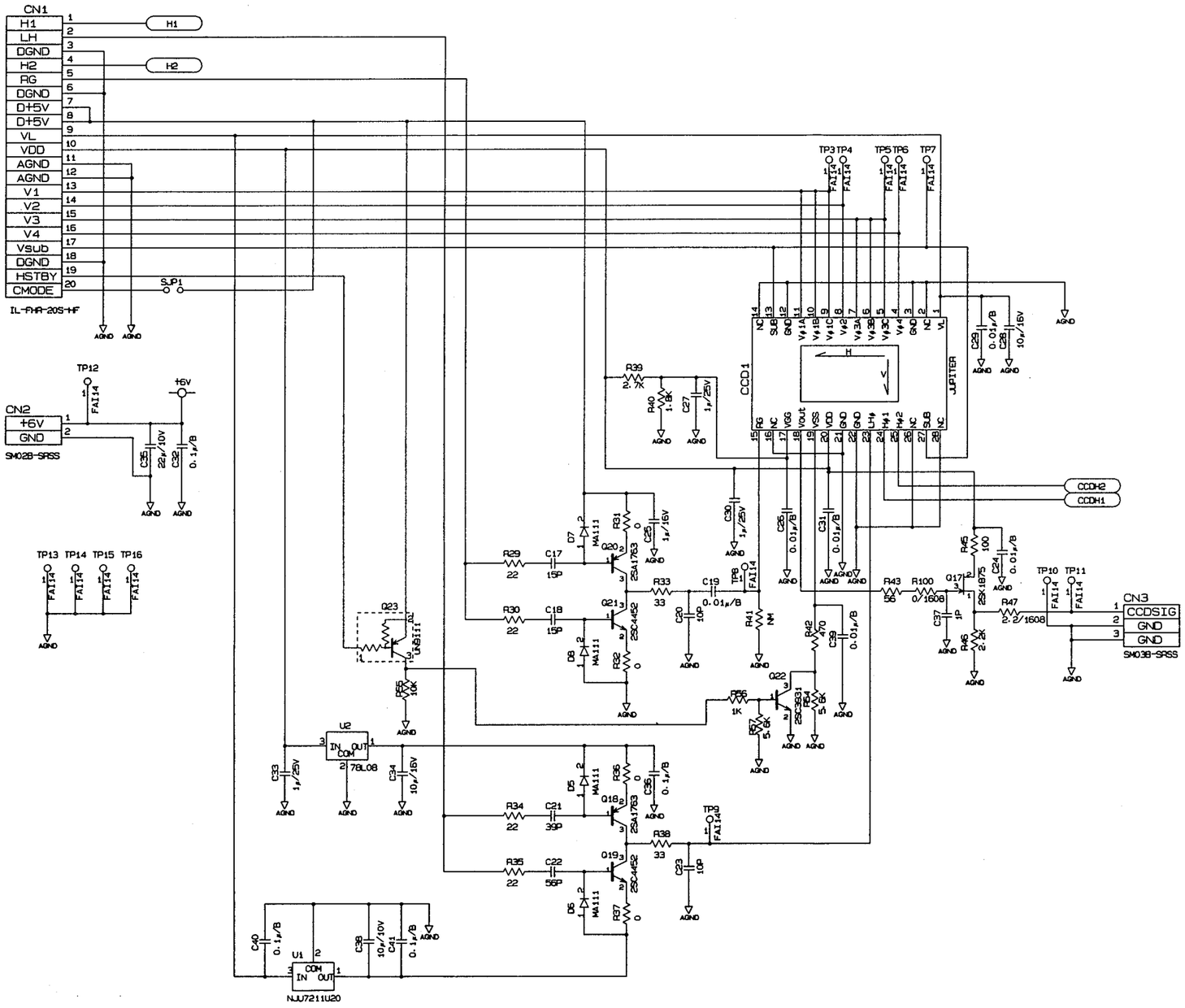

回路図(2)
Circuit diagram (2)

CCD基板
CCD PCB

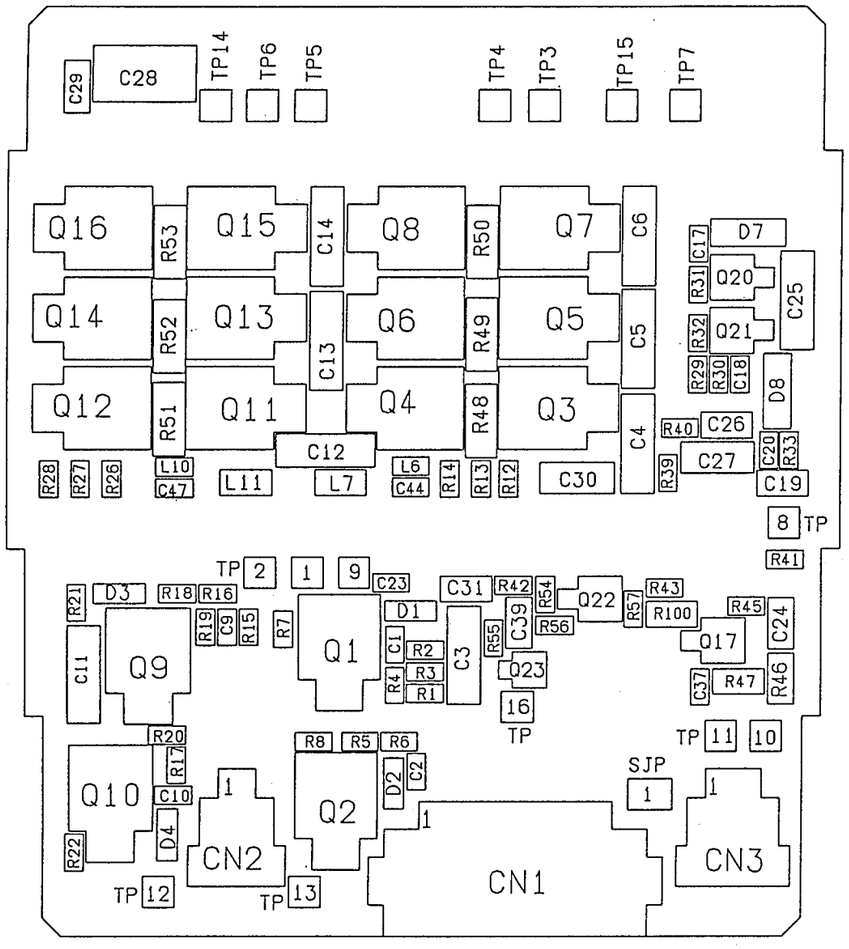

表面部品実装図
Surface parts mount figure

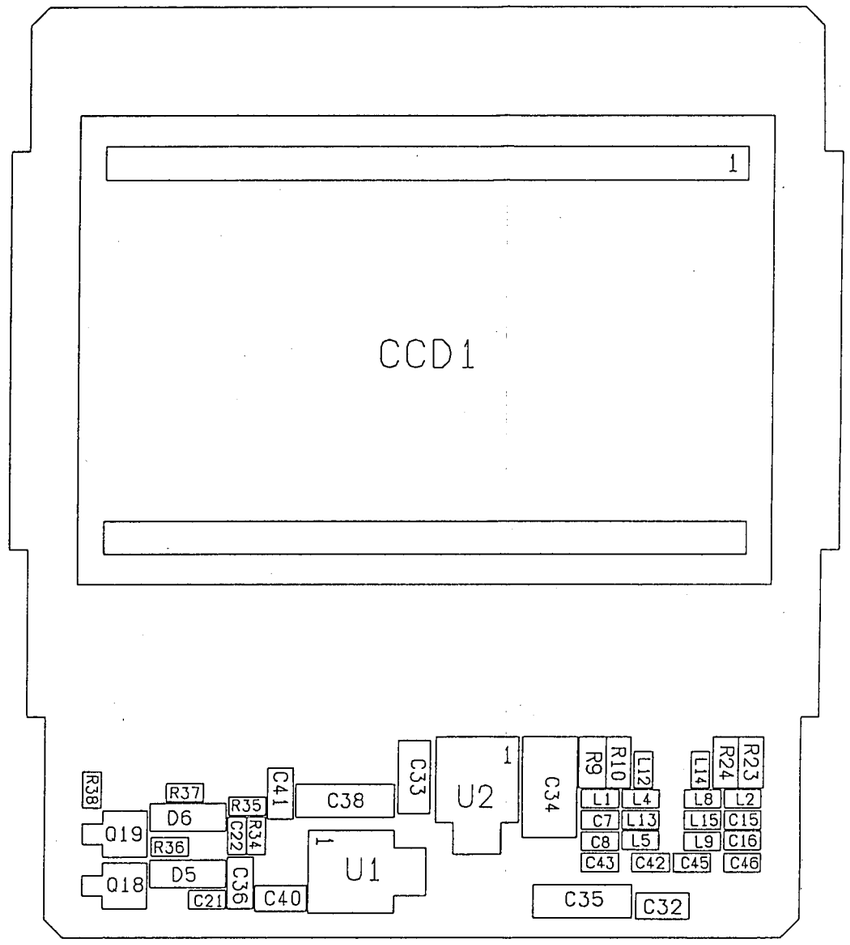

裏面部品実装図
Reverse parts mount figure

TG基板
TG PCB

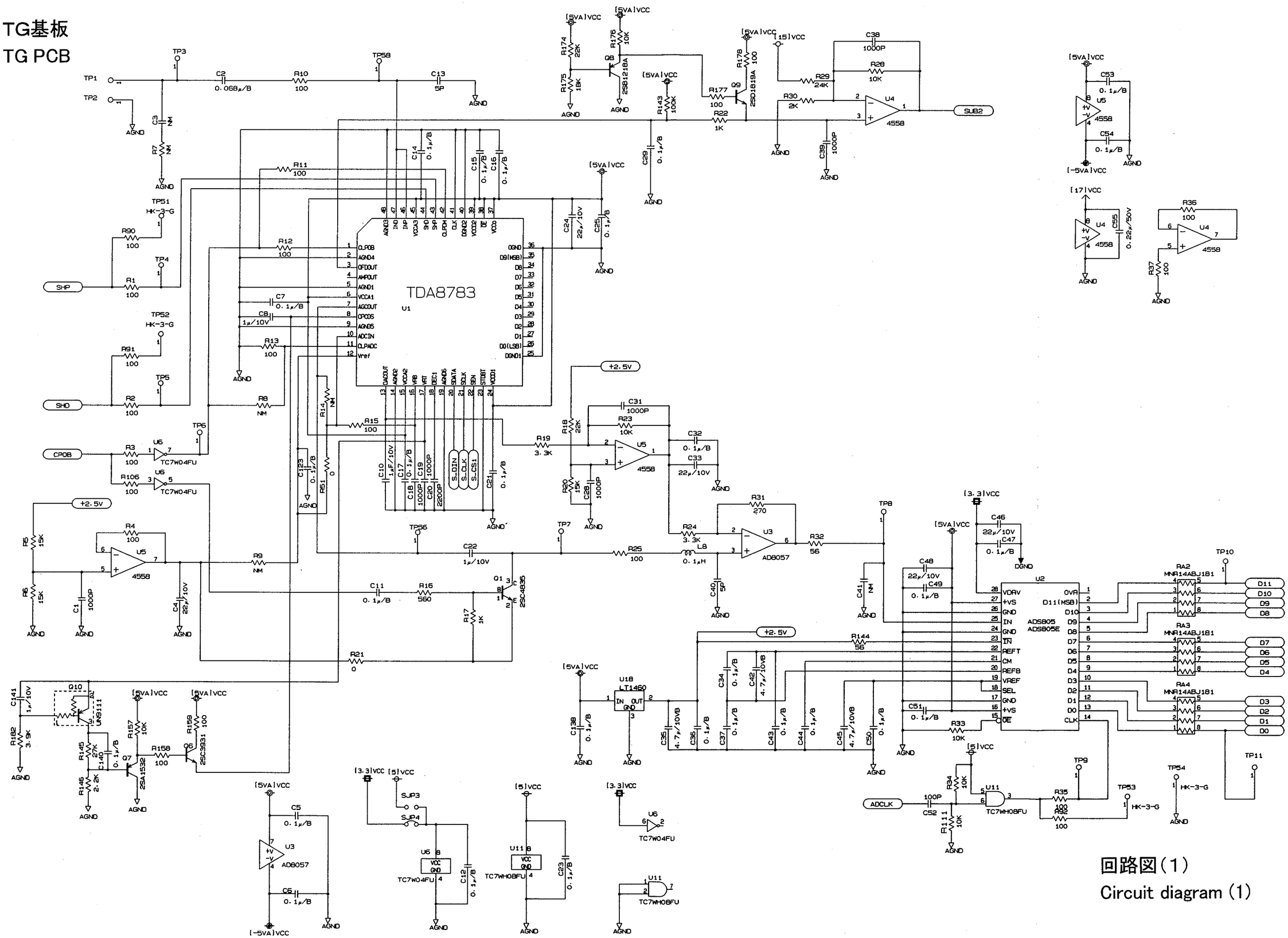

回路図(1)
Circuit diagram (1)

TG基板
TG PCB

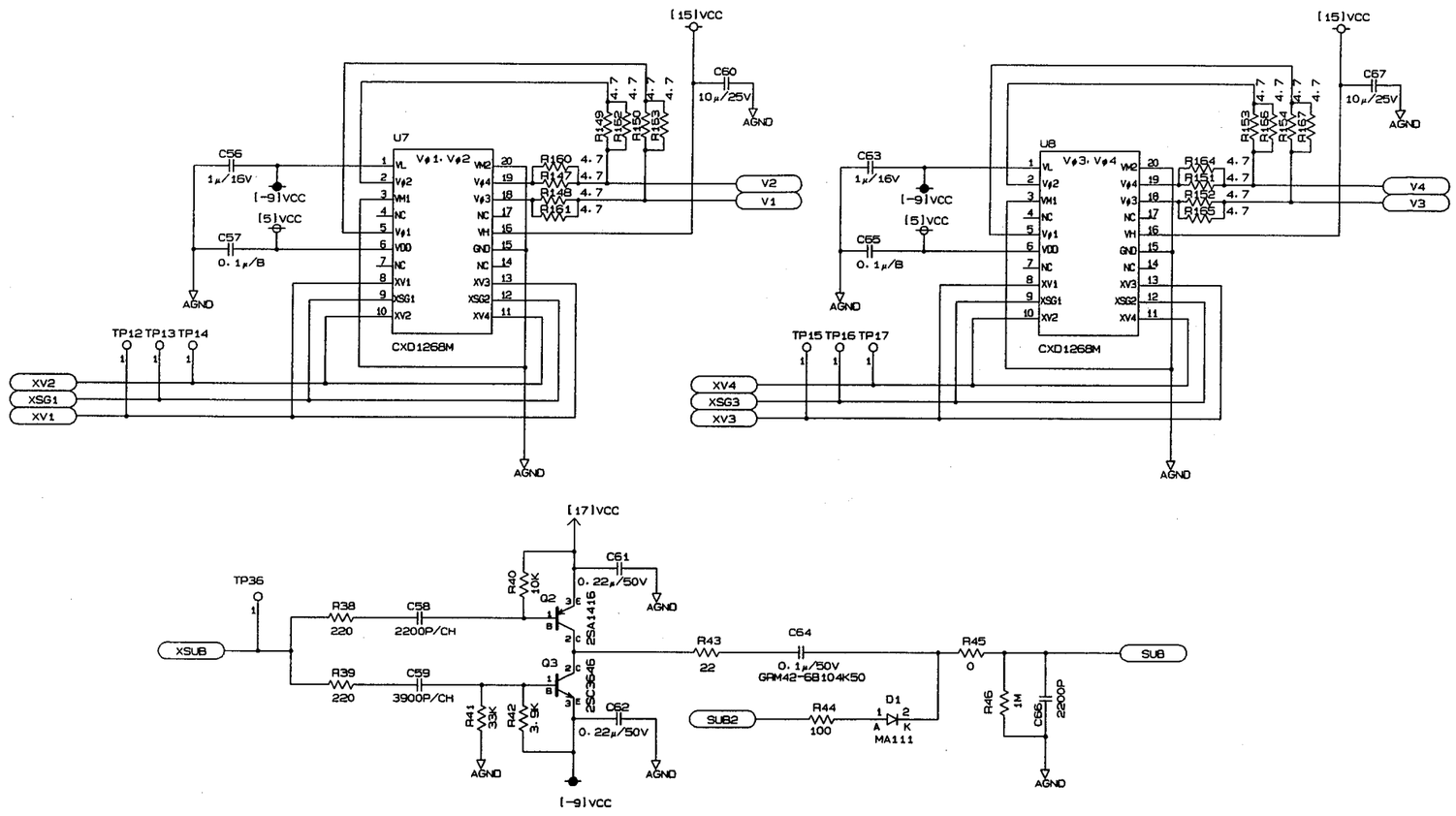

回路図(2)
Circuit diagram (2)

TG基板
TG PCB

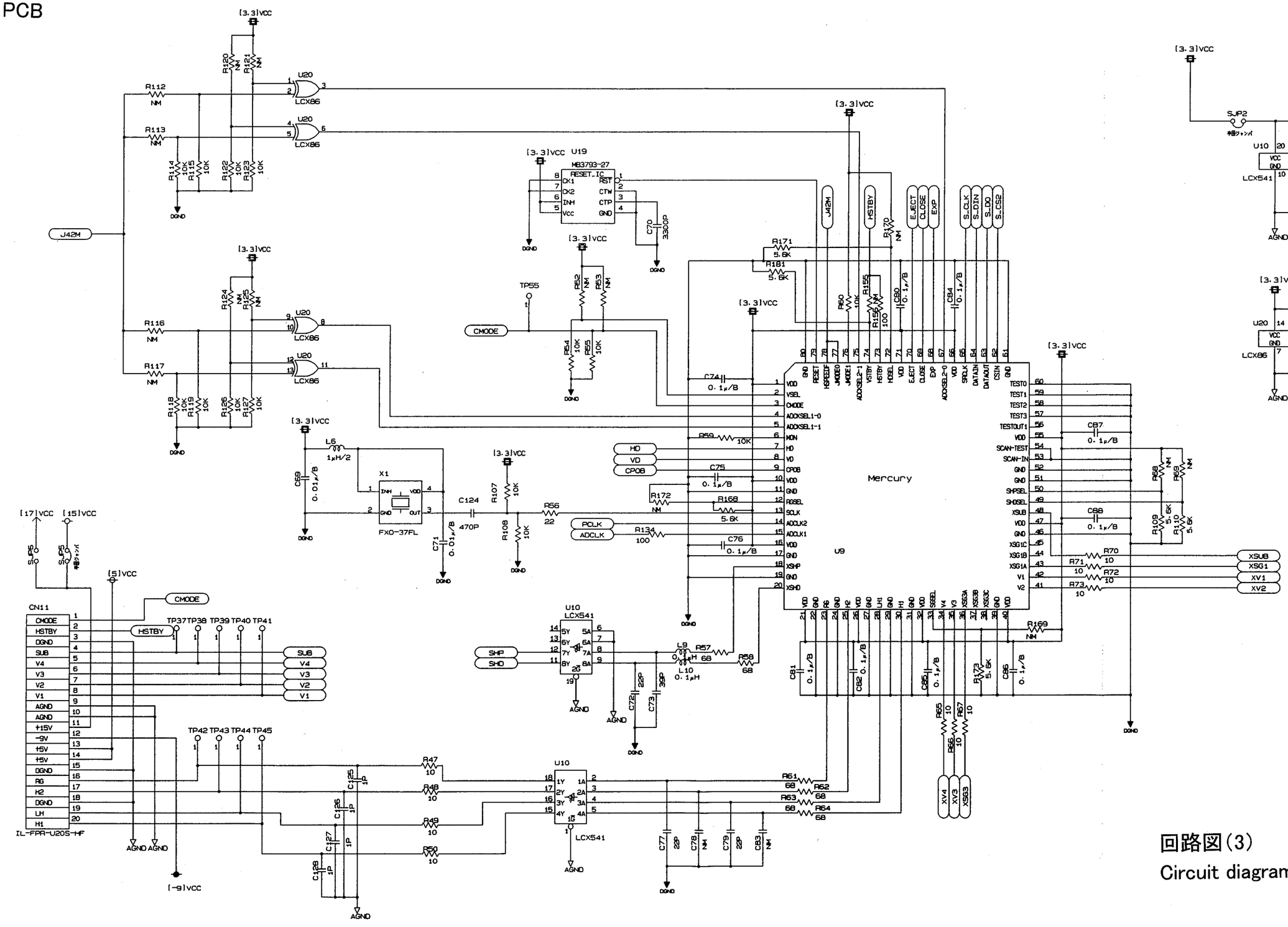

回路図(3)
Circuit diagram (3)

TG基板
TG PCB

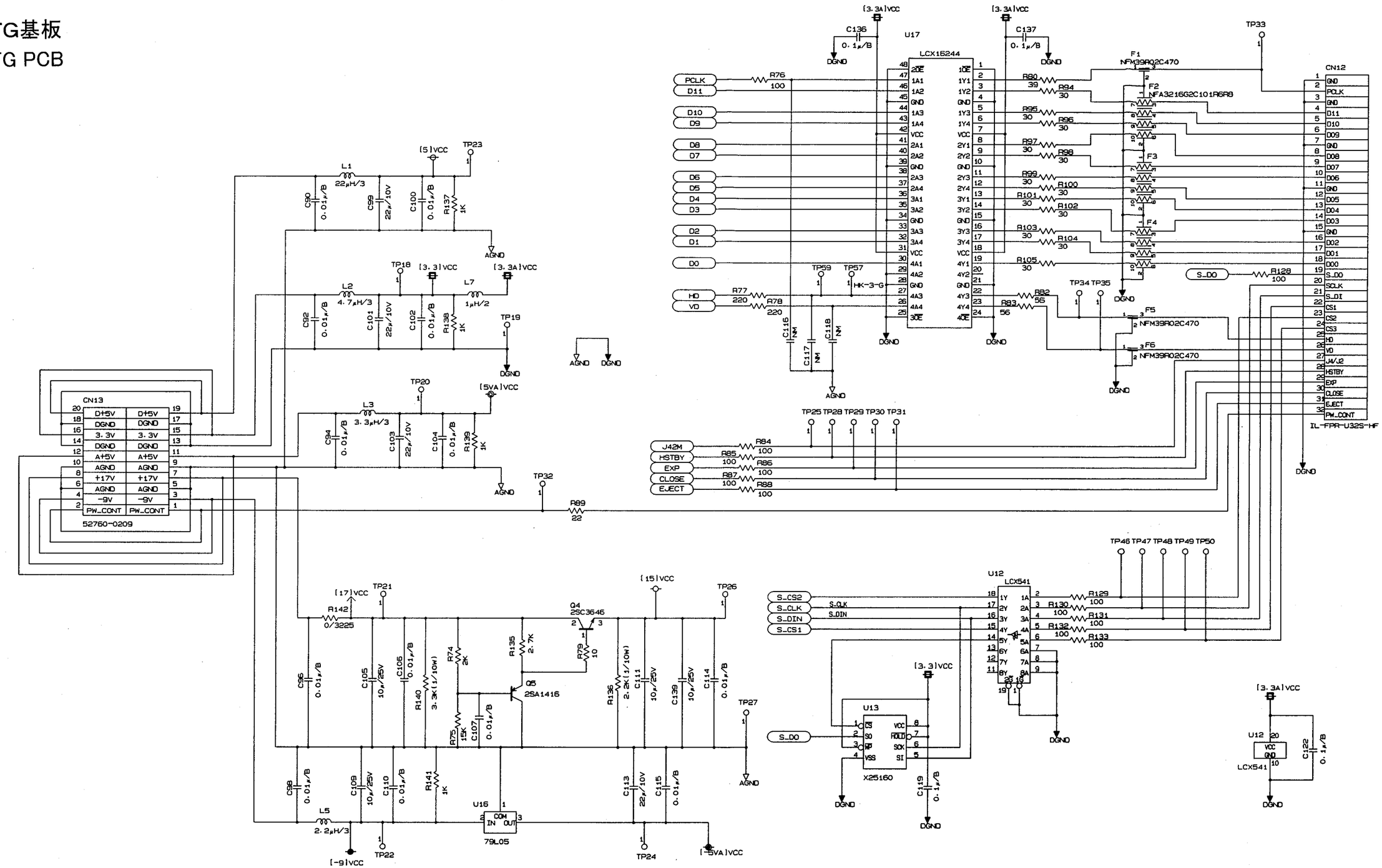

回路図(4)
Circuit diagram (4)

TG基板
TG PCB

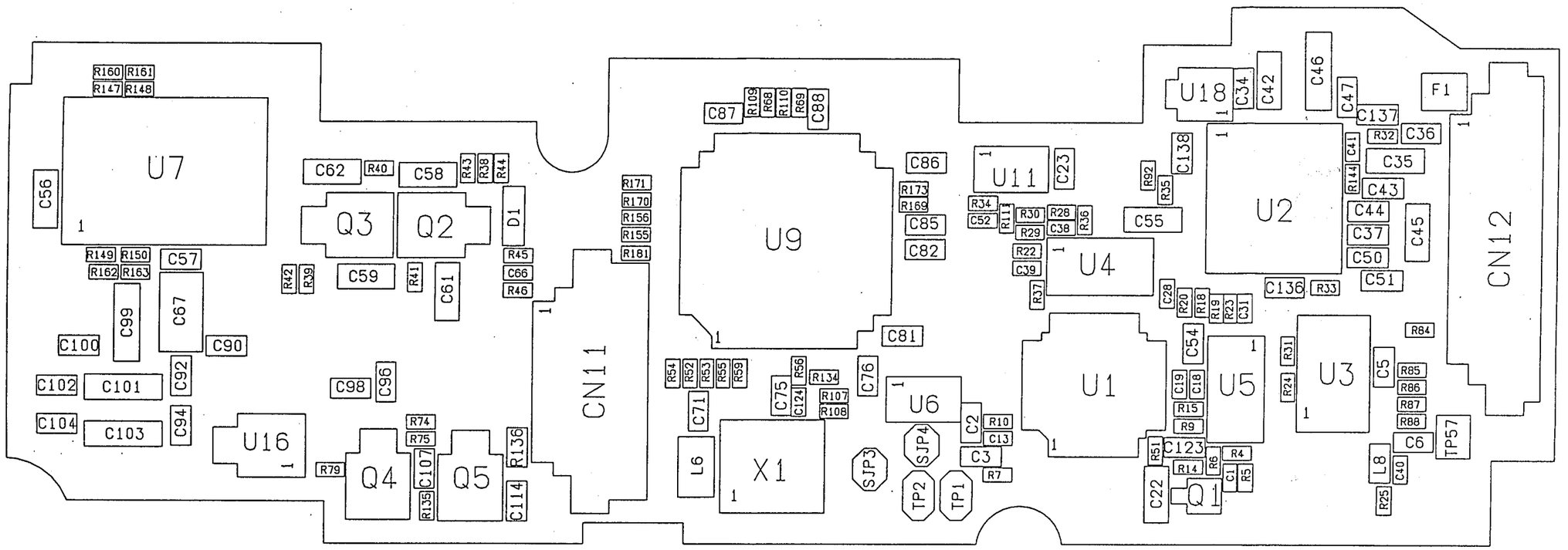

表面部品実装図
Surface parts mount figure

TG基板
TG PCB

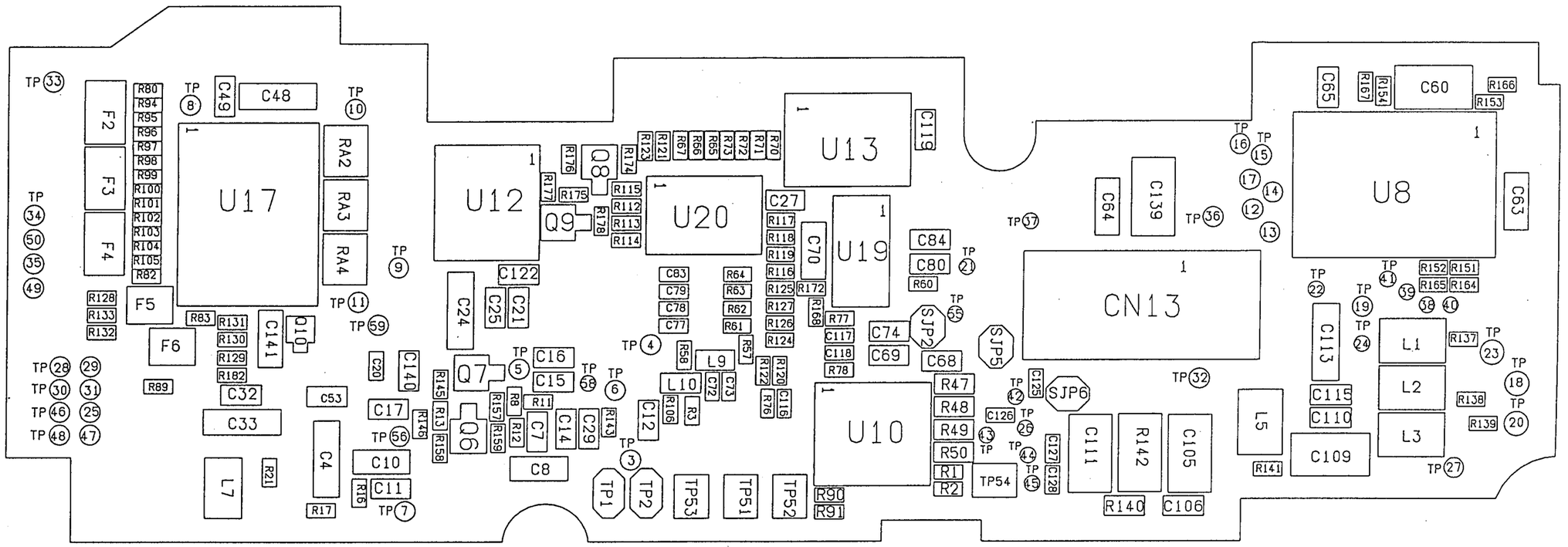

裏面部品実装図
Reverse parts mount figure

PC I／F基板
PC I/F PCB

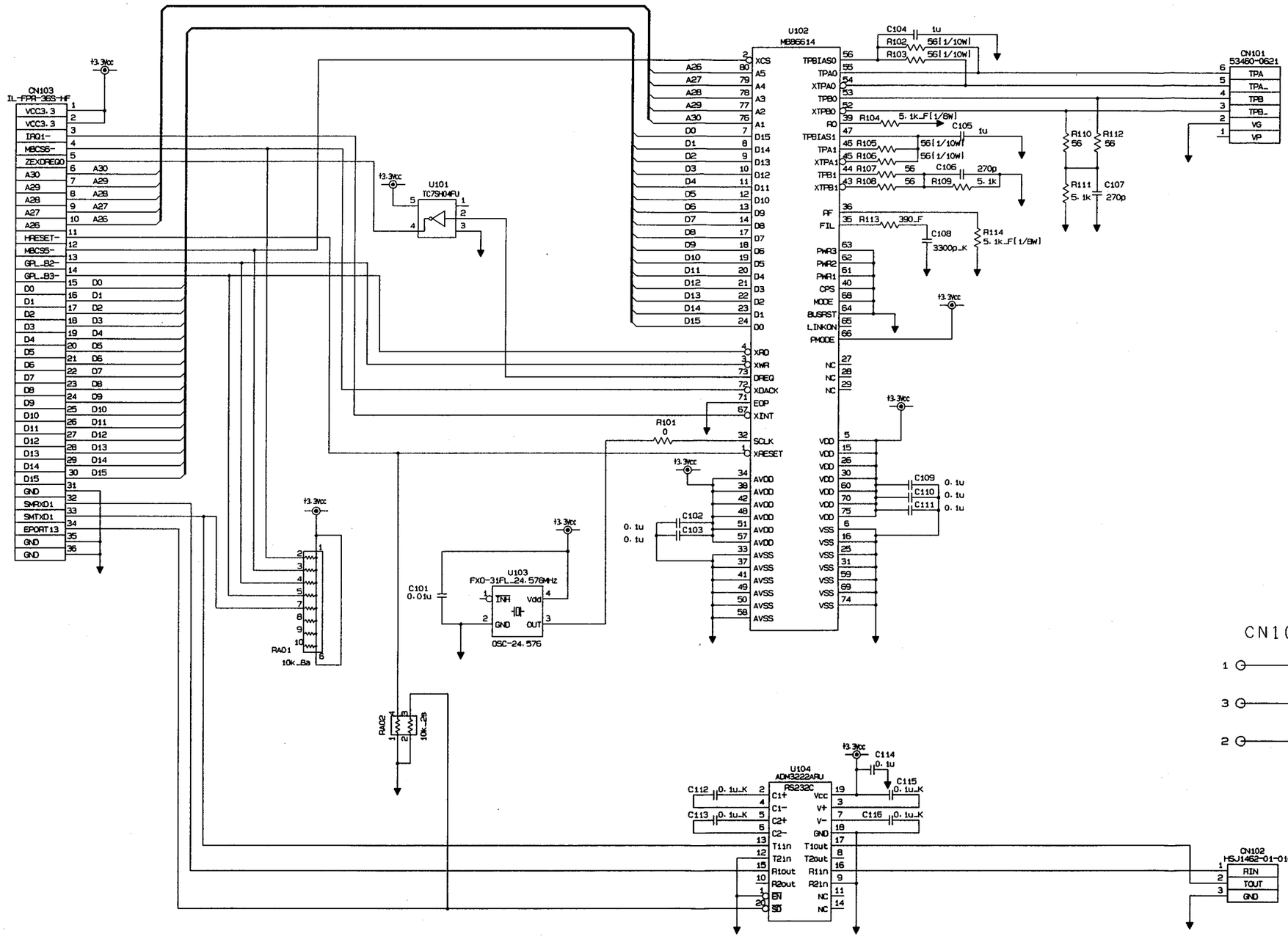

CN102構成

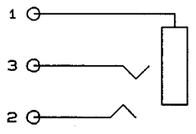

回路図
Circuit diagram

PC I／F基板
PC I/F PCB

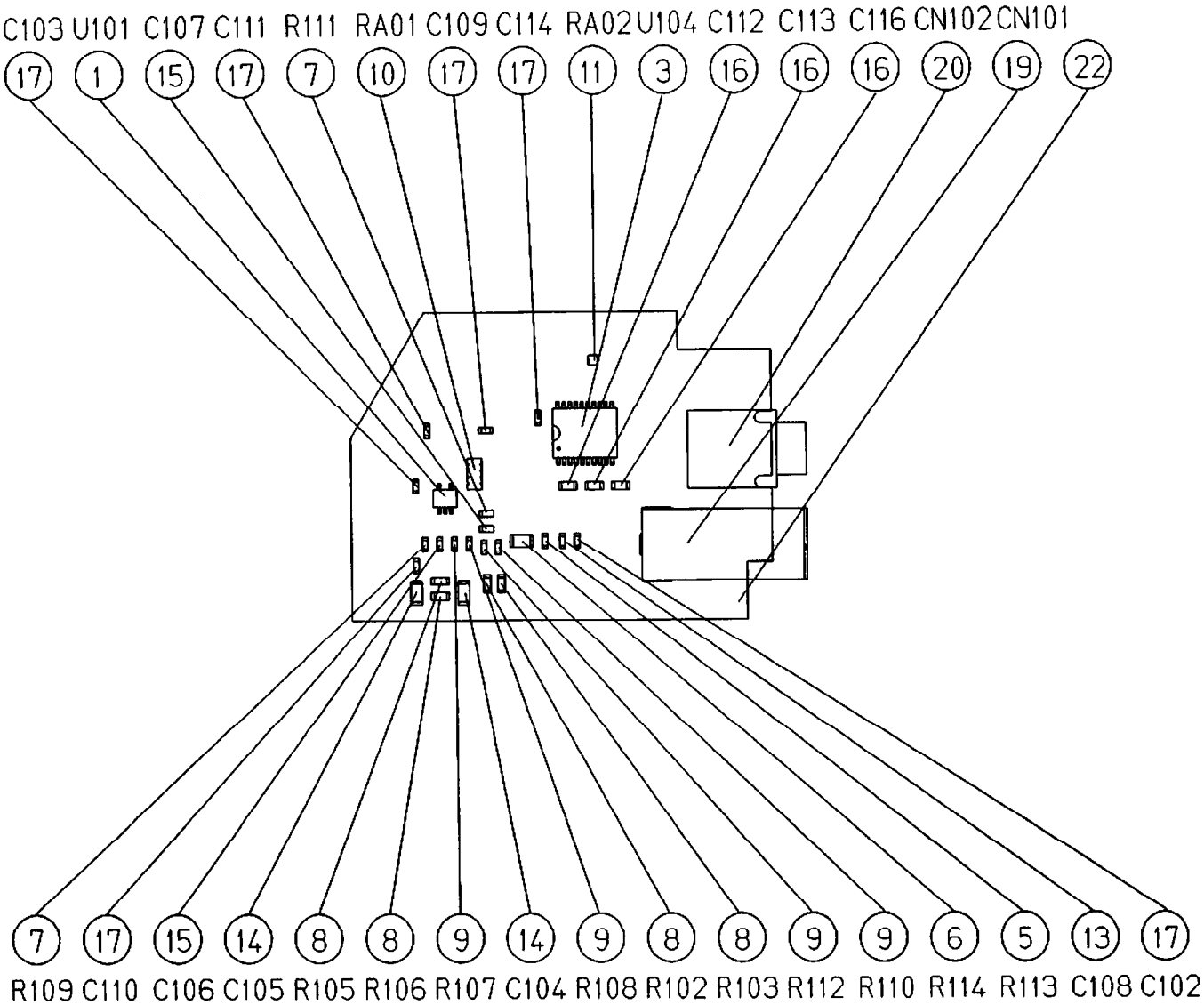

表面部品実装図
Surface parts mount figure

PC I／F基板
PC I/F PCB

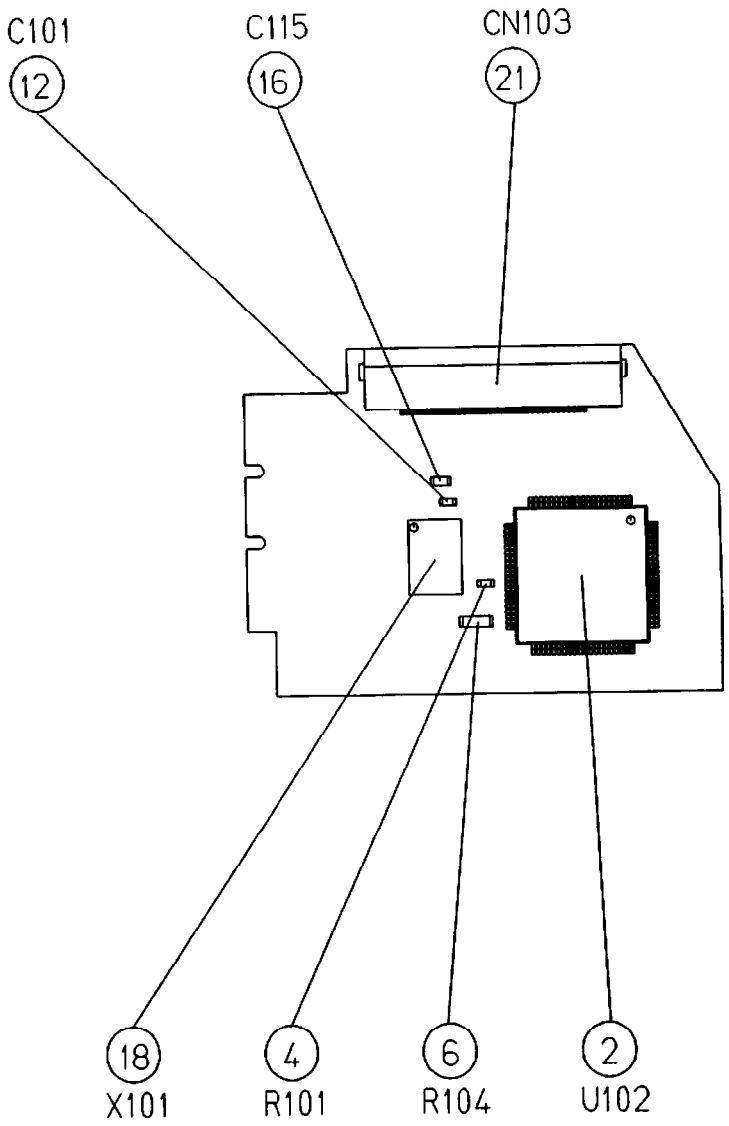

裏面部品実装図
Reverse parts mount figure

TFTドライブ基板
TFT DRIVE PCB

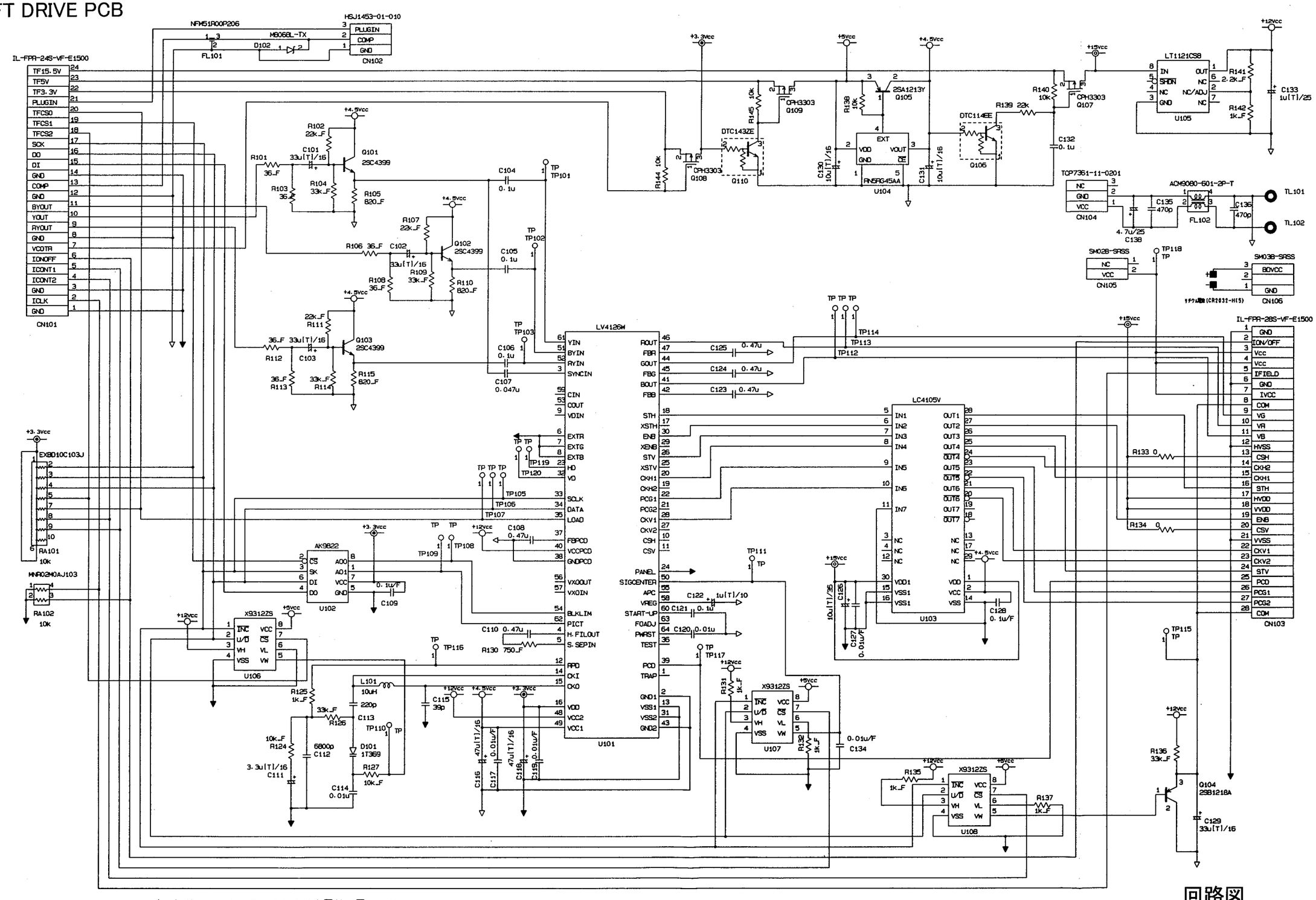

注1) TL101, TL102は半田付け用ランド
TP101～TP120はチェック用ランド
R116, R117, R118, R119, R120, R121, R122, R123, R128, R129, R143, TP104, C137は欠番

回路図
Circuit diagram

TFTドライブ基板
TFT DRIVE PCB

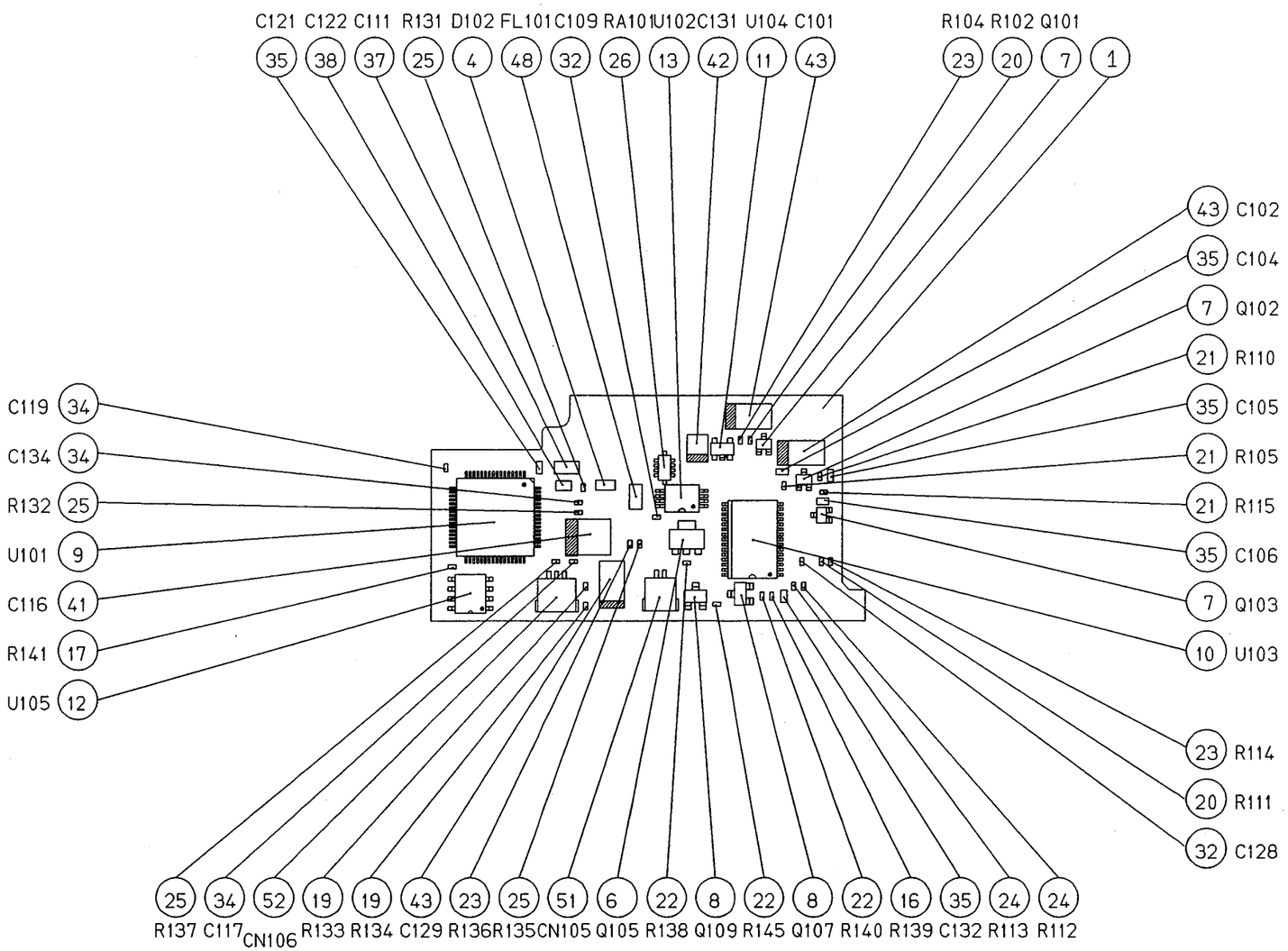

表面部品実装図
Surface parts mount figure

TFTドライブ基板
TFT DRIVE PCB

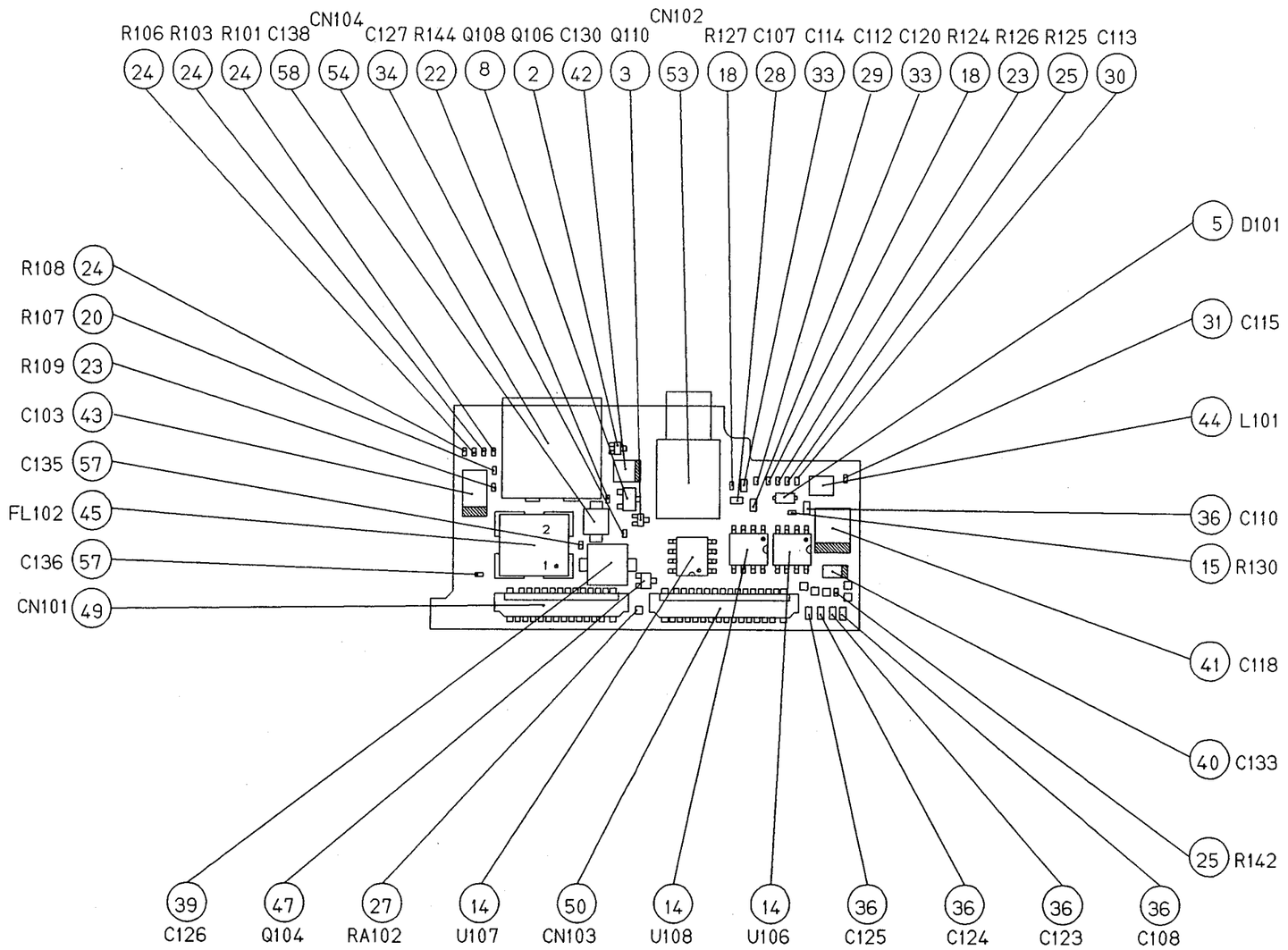

裏面部品実装図
Reverse parts mount figure

メインFPC
MAIN FPC

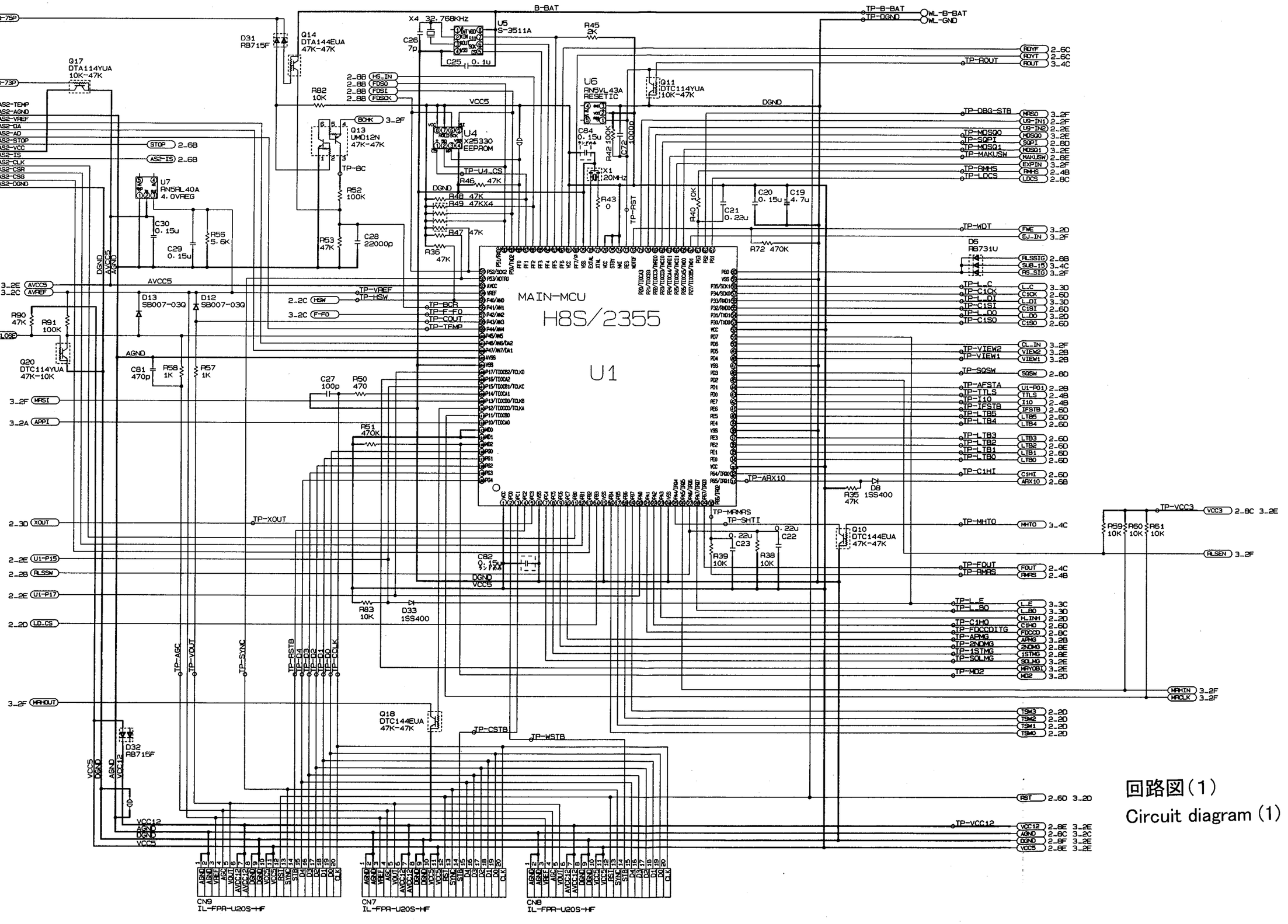

回路図(1)
Circuit diagram (1)

メインFPC
MAIN FPC

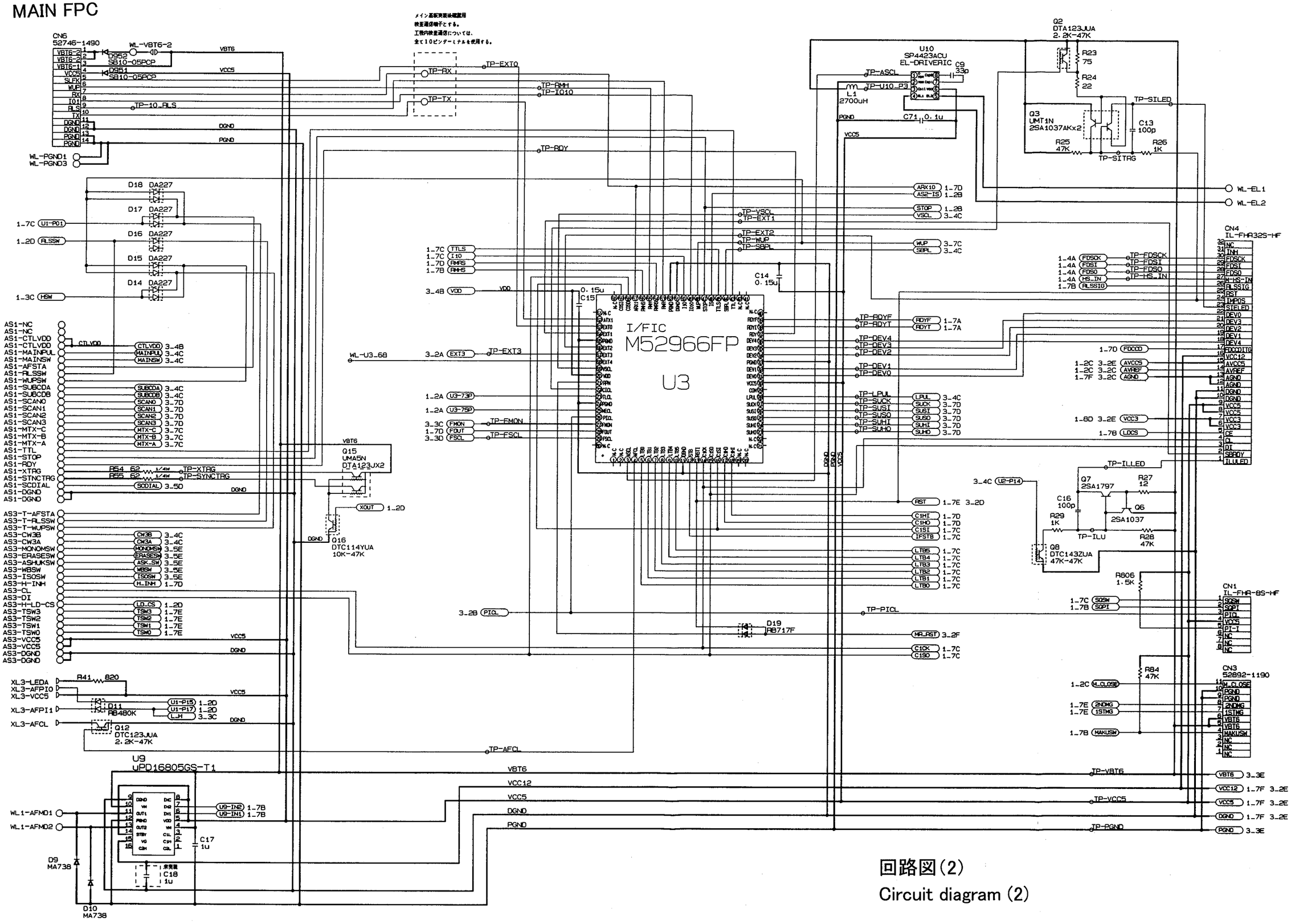

回路図(2)
Circuit diagram (2)

メインFPC
MAIN FPC

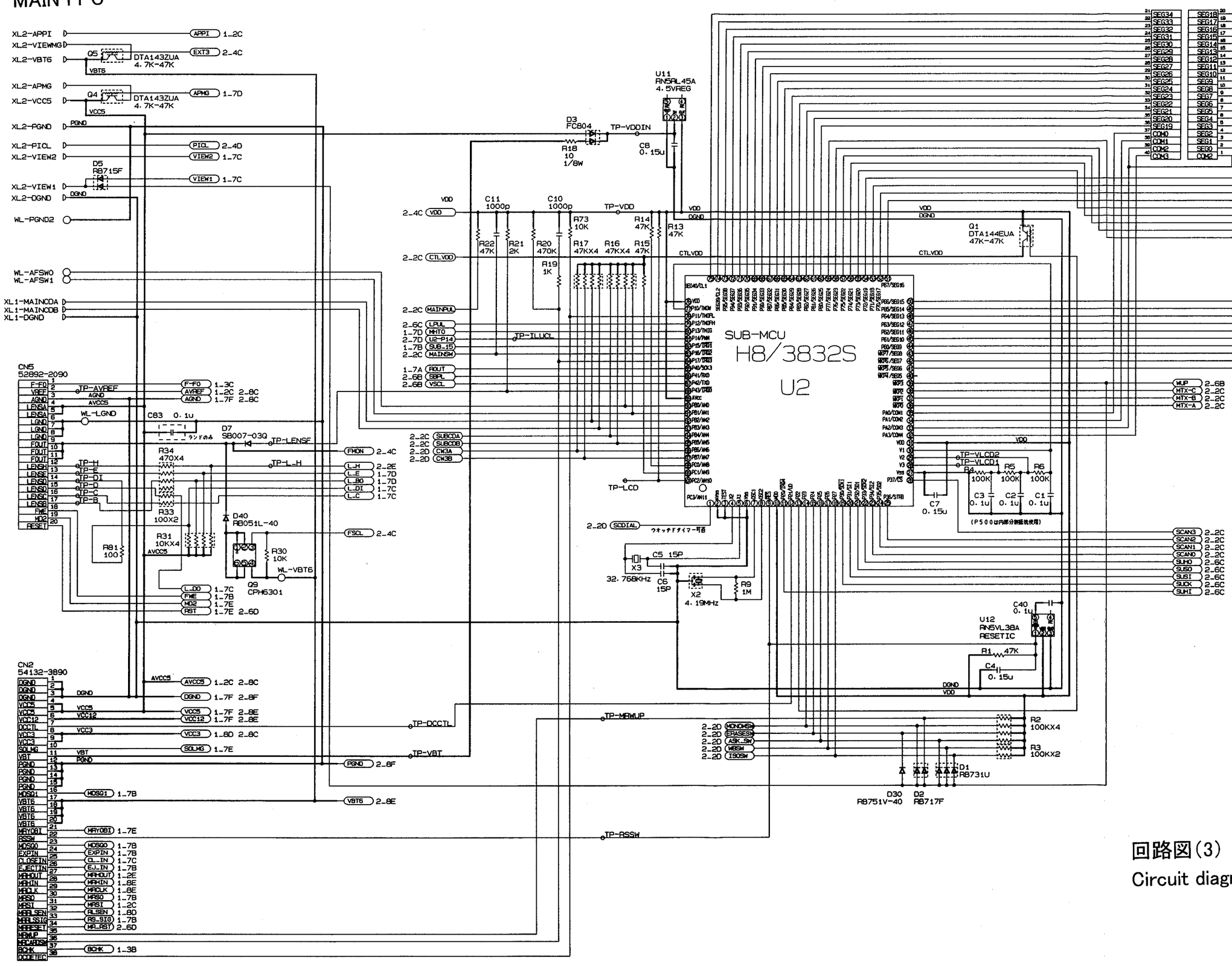

回路図(3)
Circuit diagram (3)

メインFPC
MAIN FPC

表面部品実装図
Surface parts mount figure

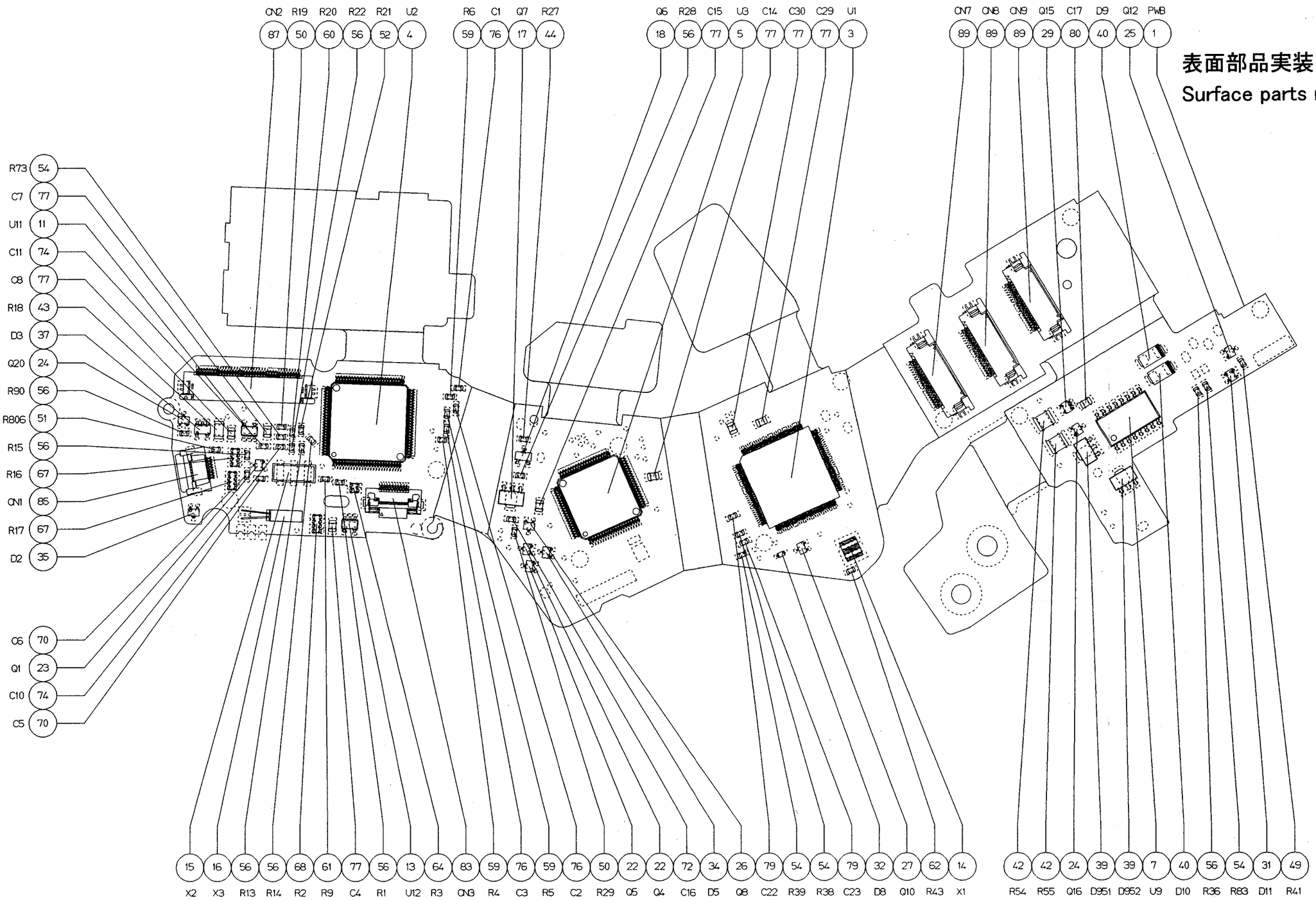

メインFPC
MAIN FPC

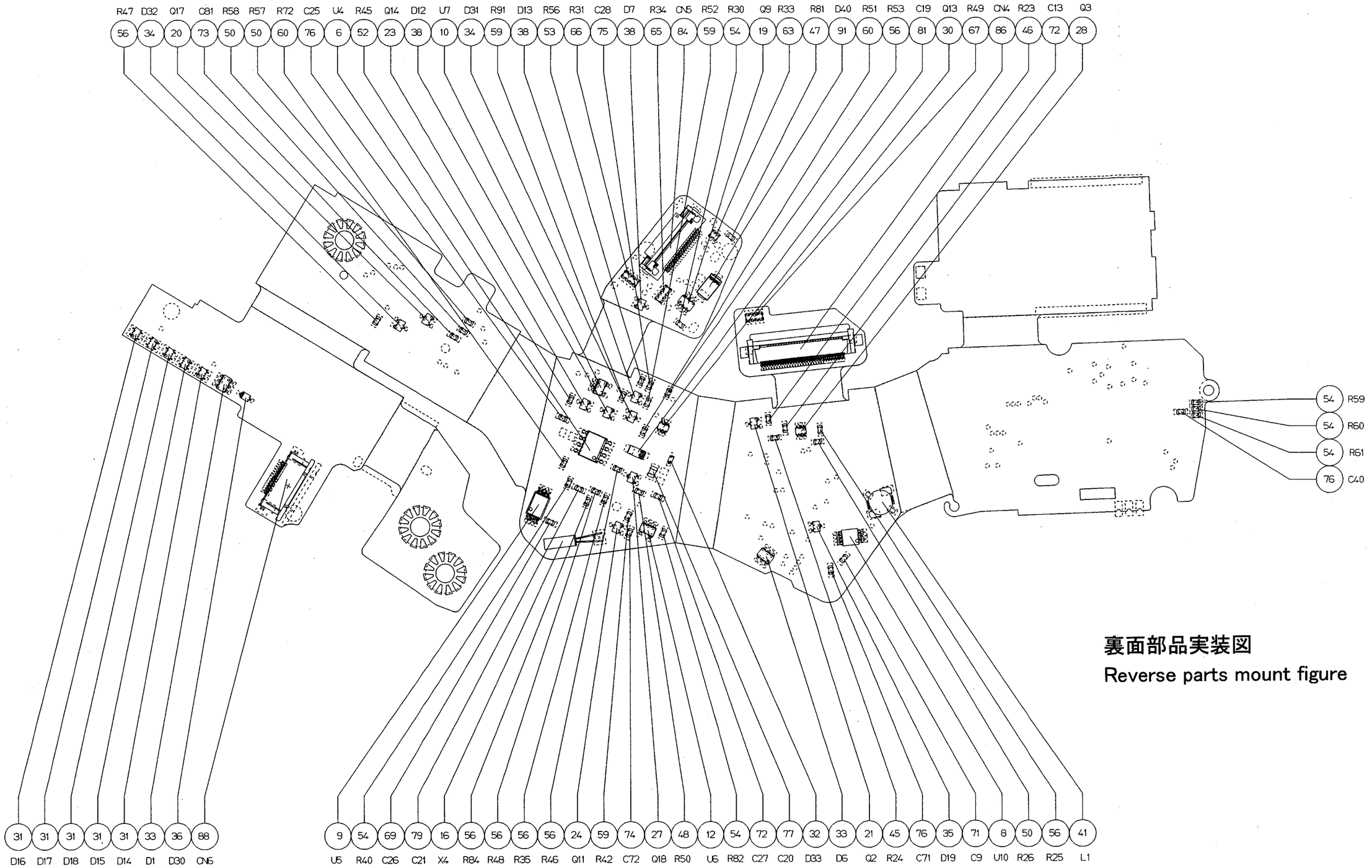

裏面部品実装図
Reverse parts mount figure

メインFPC
MAIN FPC

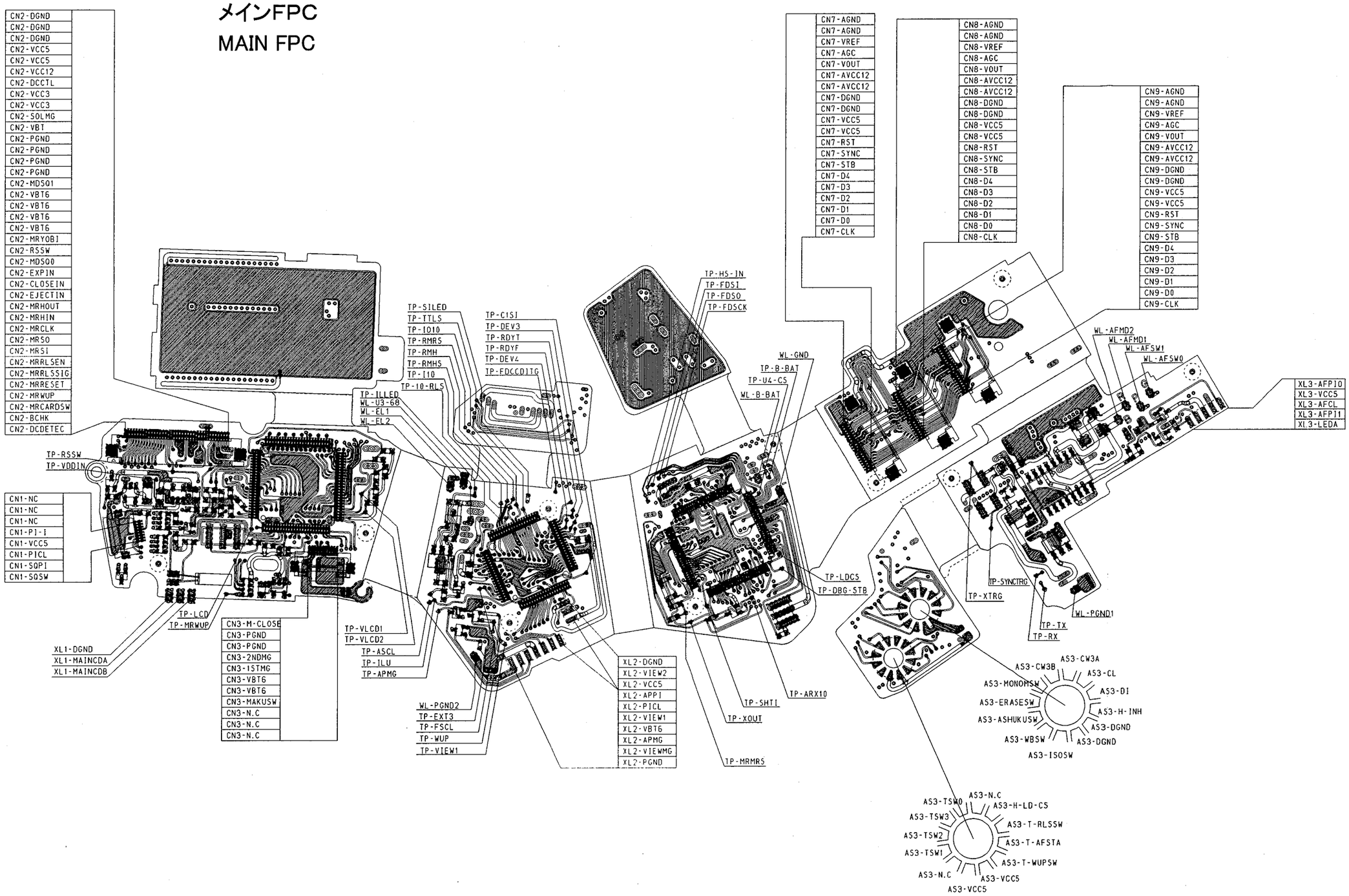

表面パターン図
Surface pattern figure

メインFPC
MAIN FPC

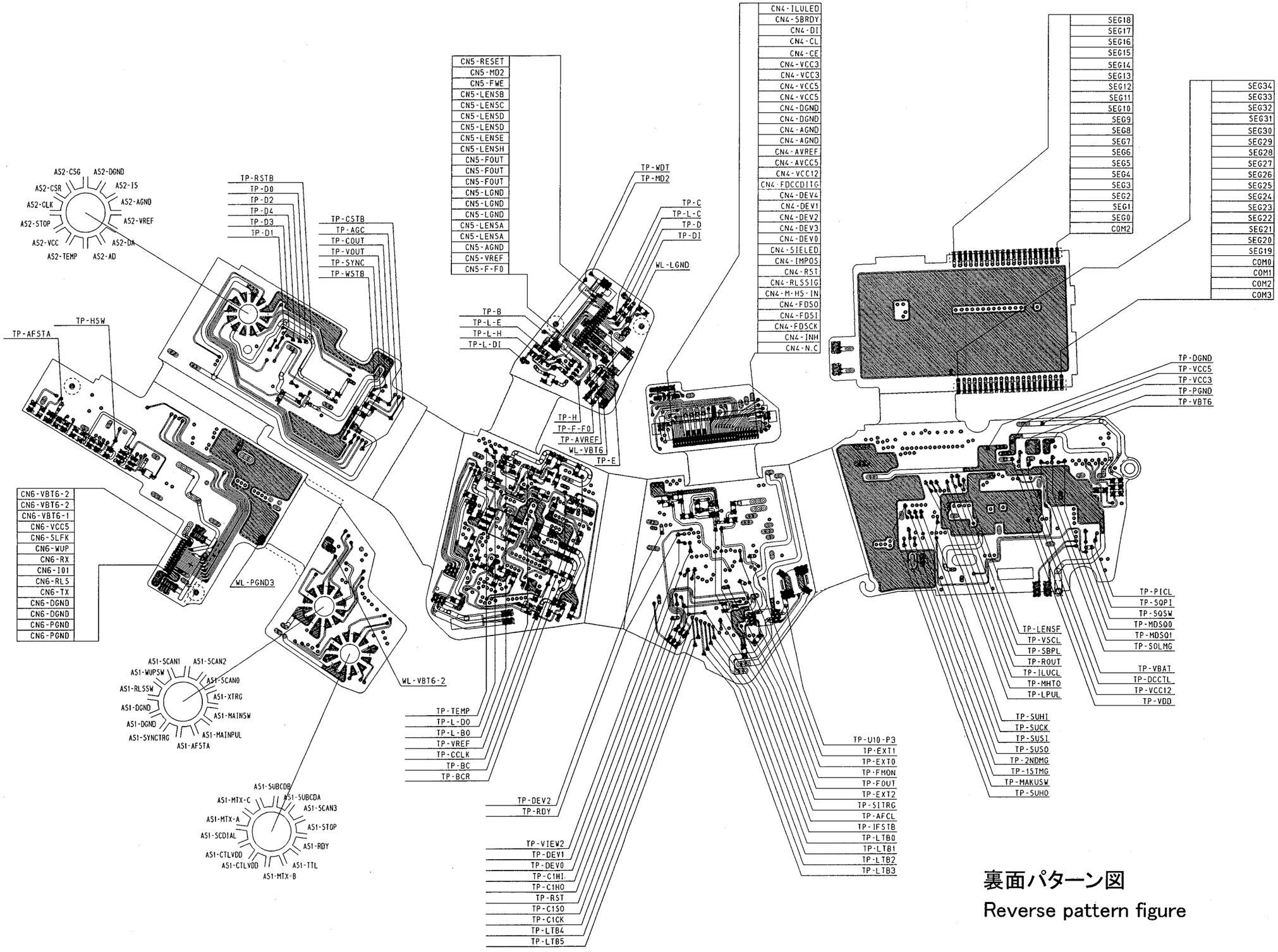

裏面パターン図
Reverse pattern figure

測光／F内表示FPC
FINDER METERING FPC

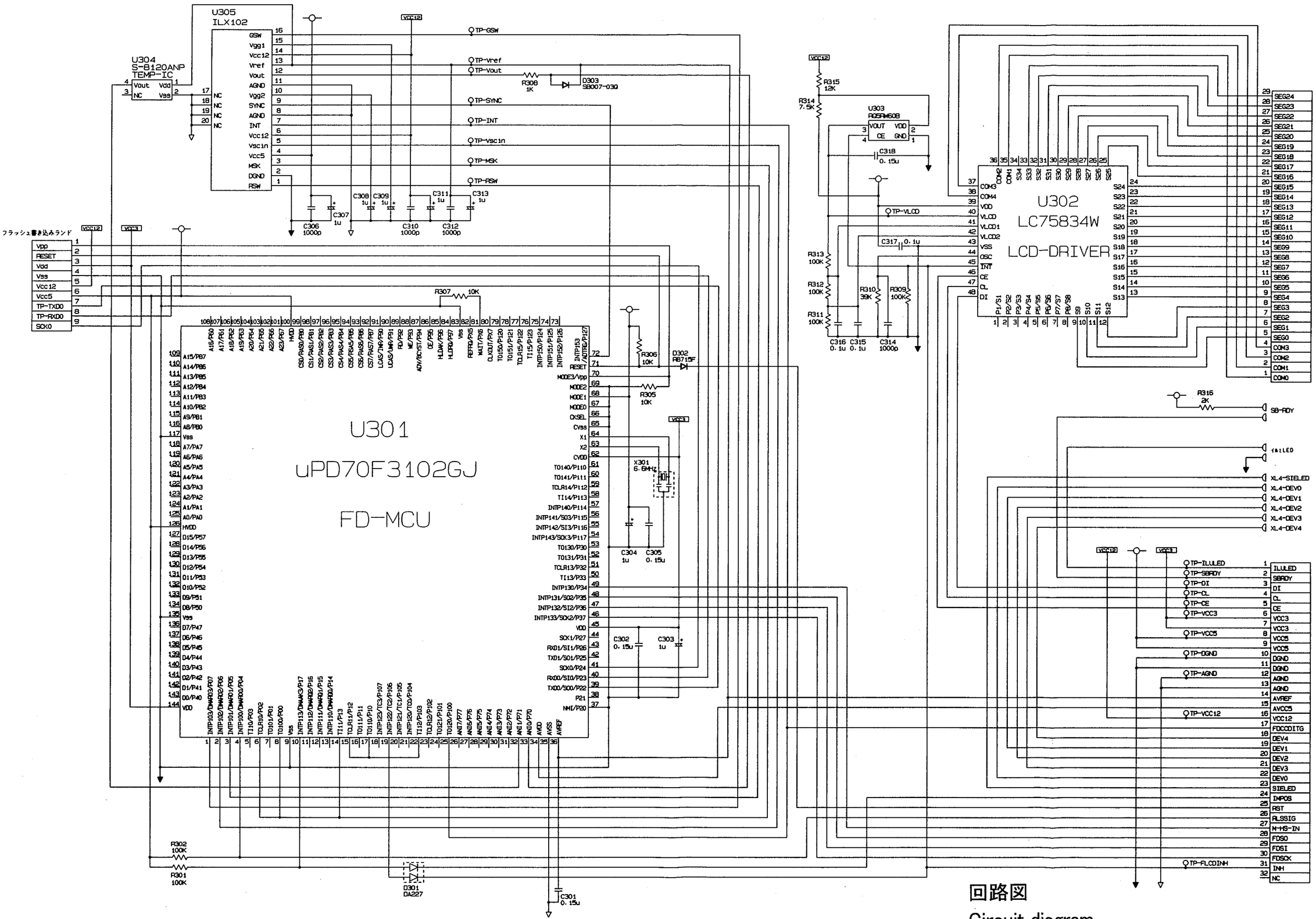

回路図
Circuit diagram

測光／F内表示FPC
FINDER METERING FPC

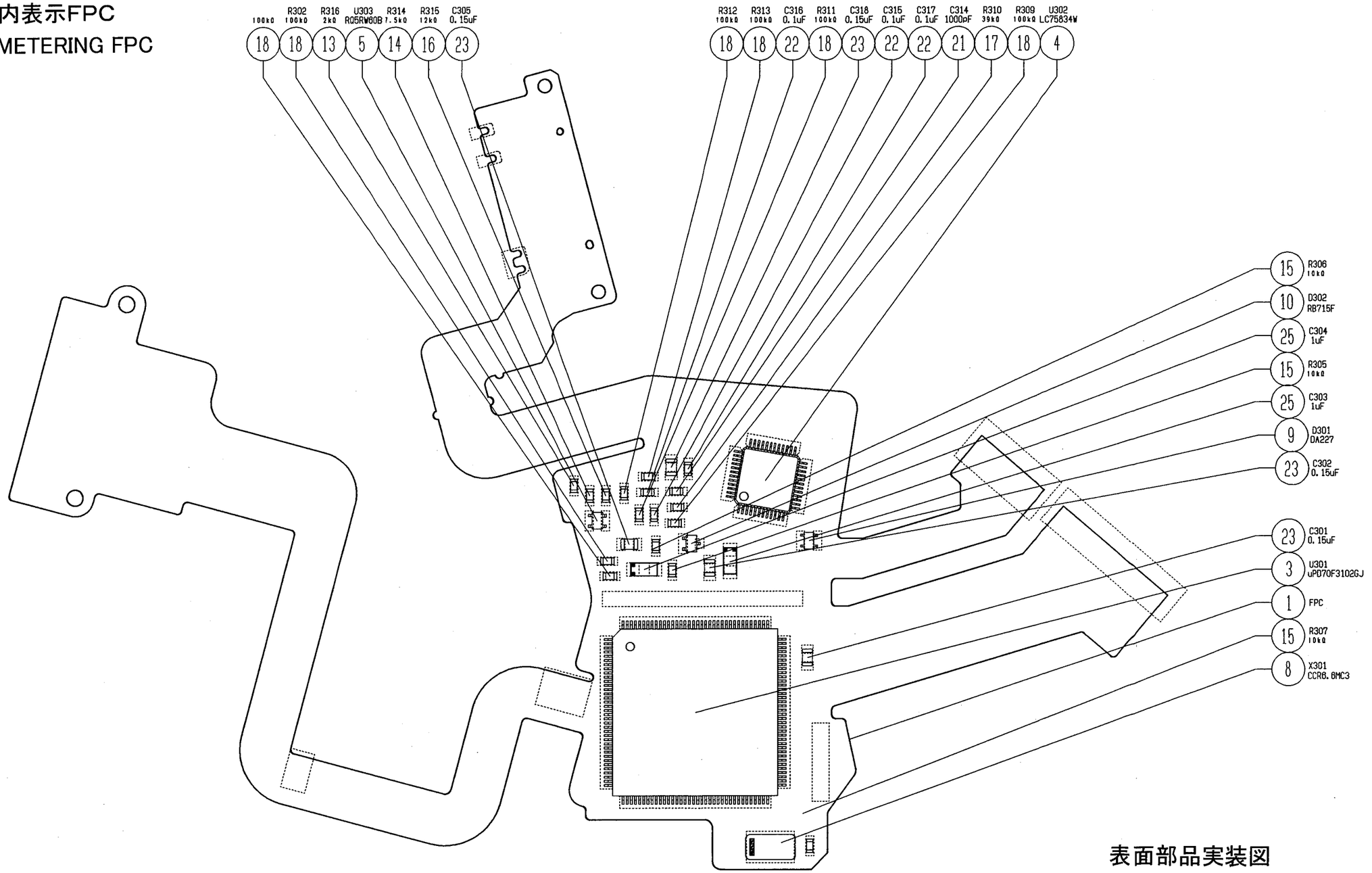

表面部品実装図
Surface parts mount figure

測光／F内表示FPC
FINDER METERING FPC

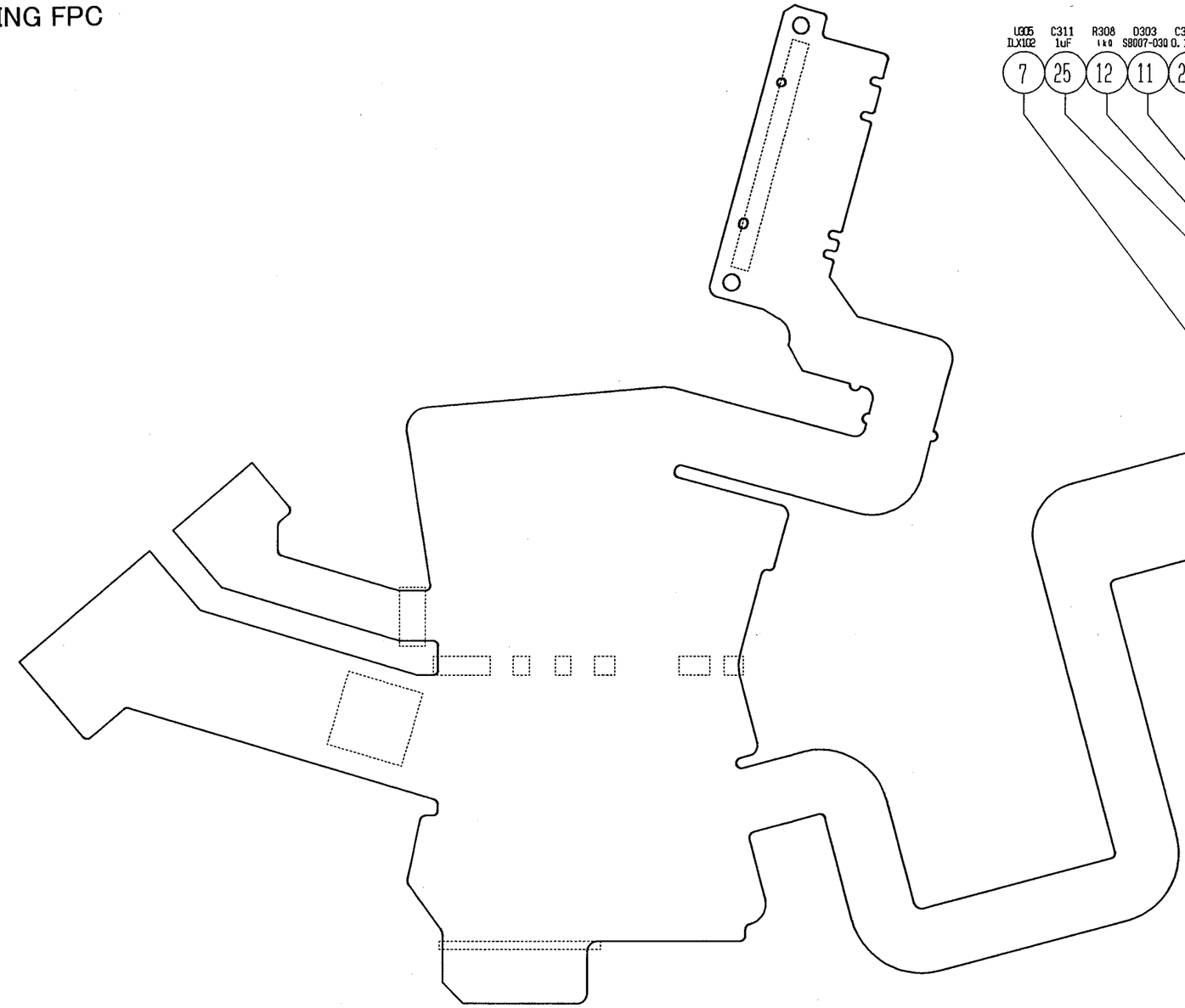

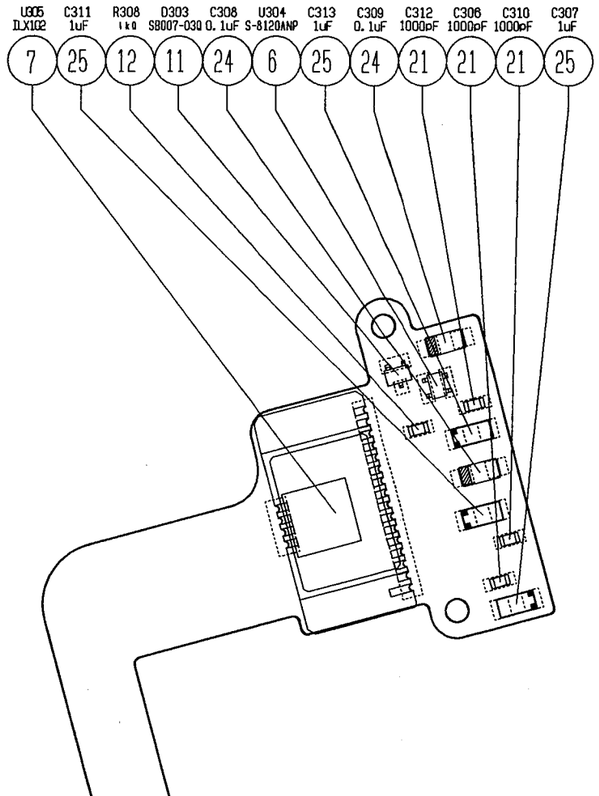

裏面部品実装図
Reverse parts mount figure

測光／F内表示FPC
FINDER METERING FPC

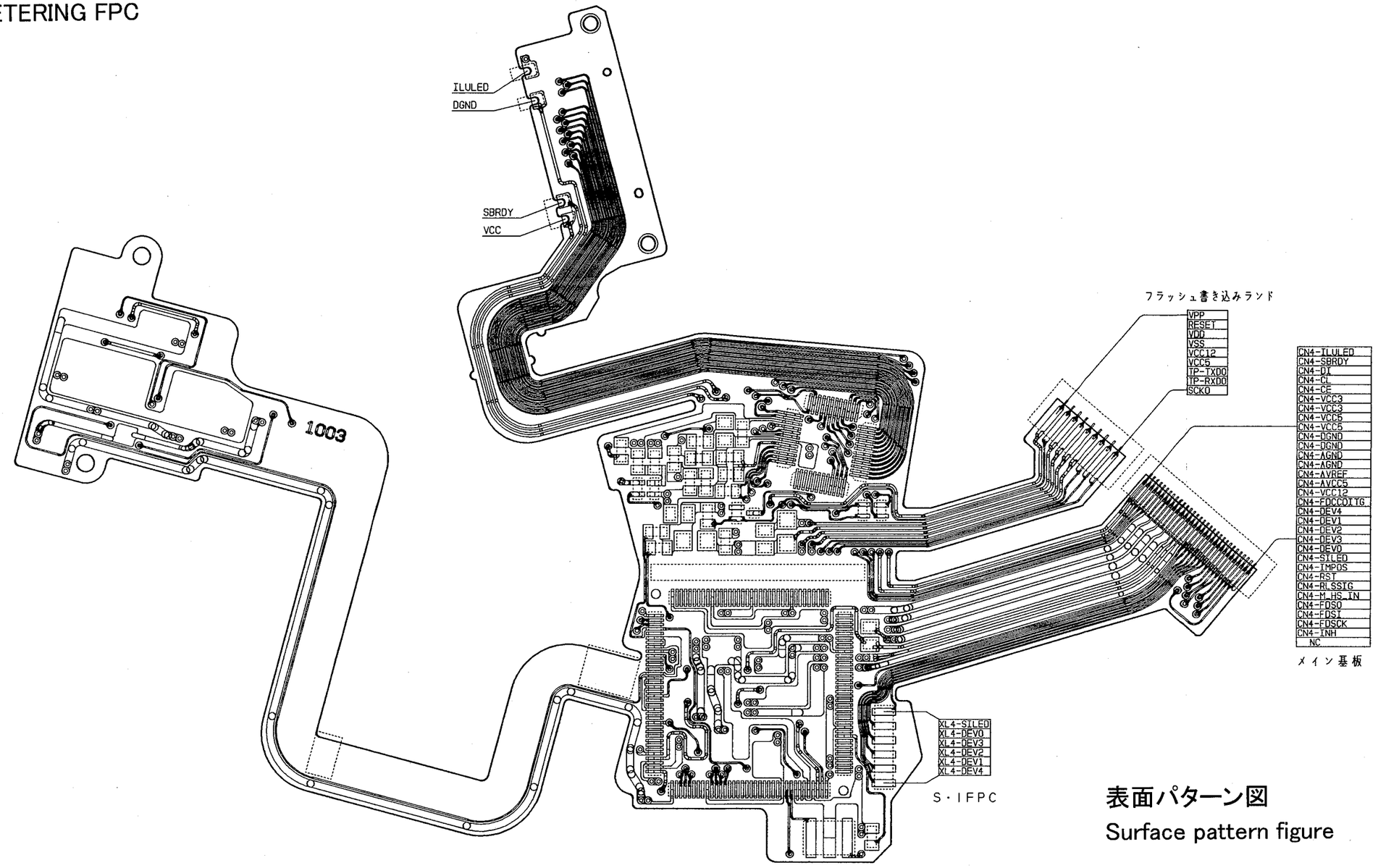

表面パターン図
Surface pattern figure

測光／F内表示FPC
FINDER METERING FPC

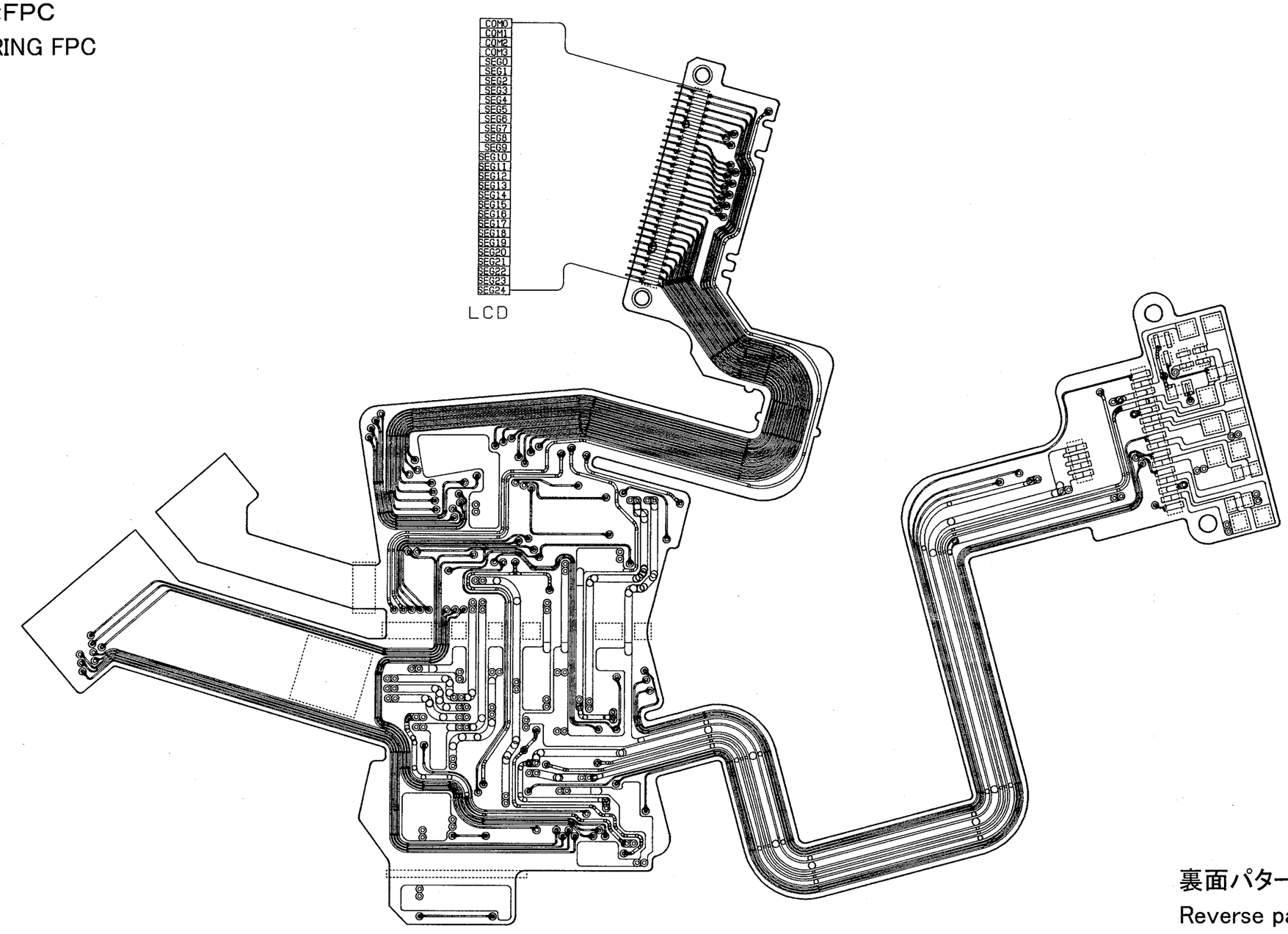

裏面パターン図
Reverse pattern figure

圧縮記録基板
COMPRESSION MEMORY PCB

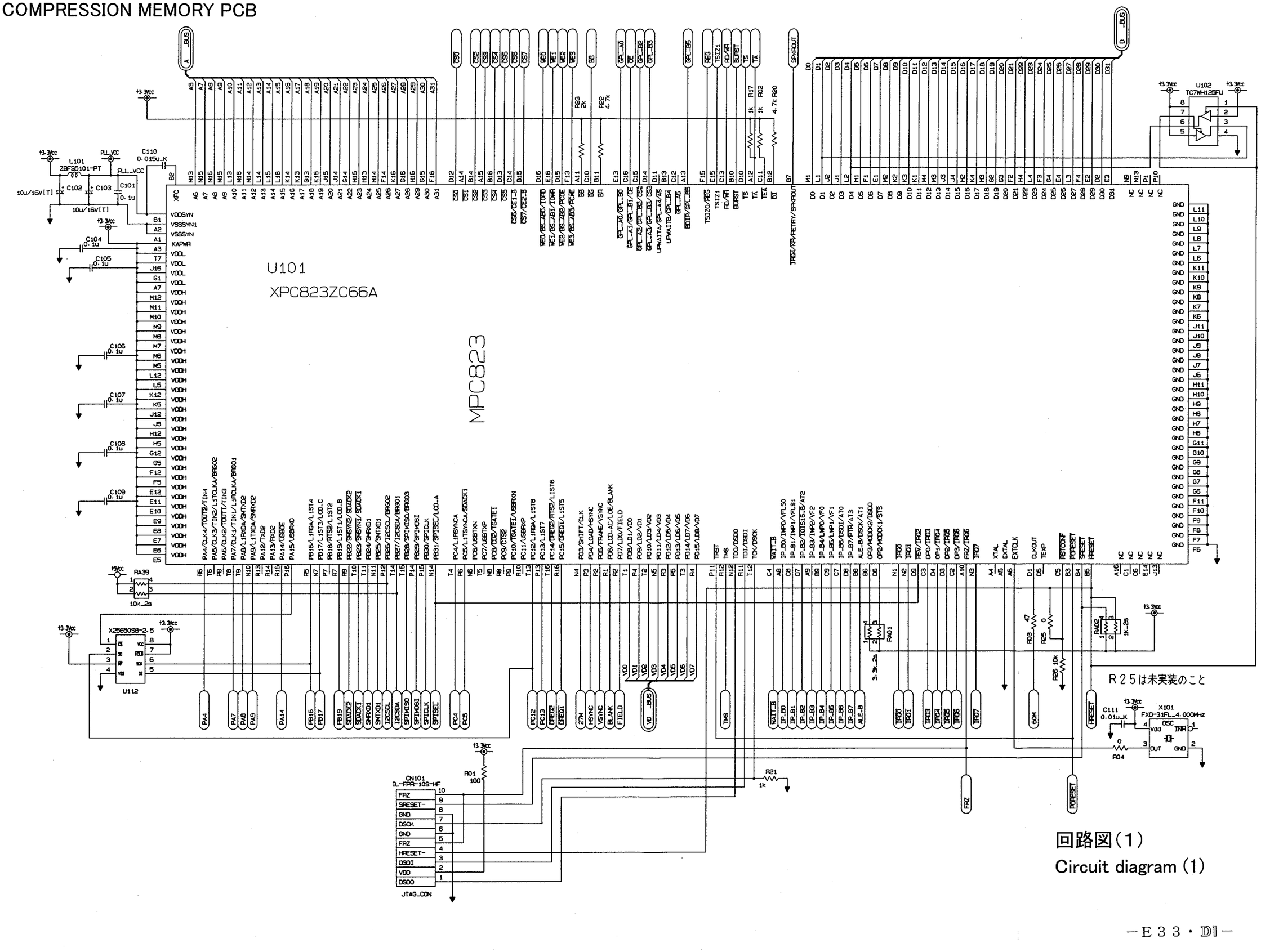

回路図(1)
Circuit diagram (1)

圧縮記録基板
COMPRESSION MEMORY PCB

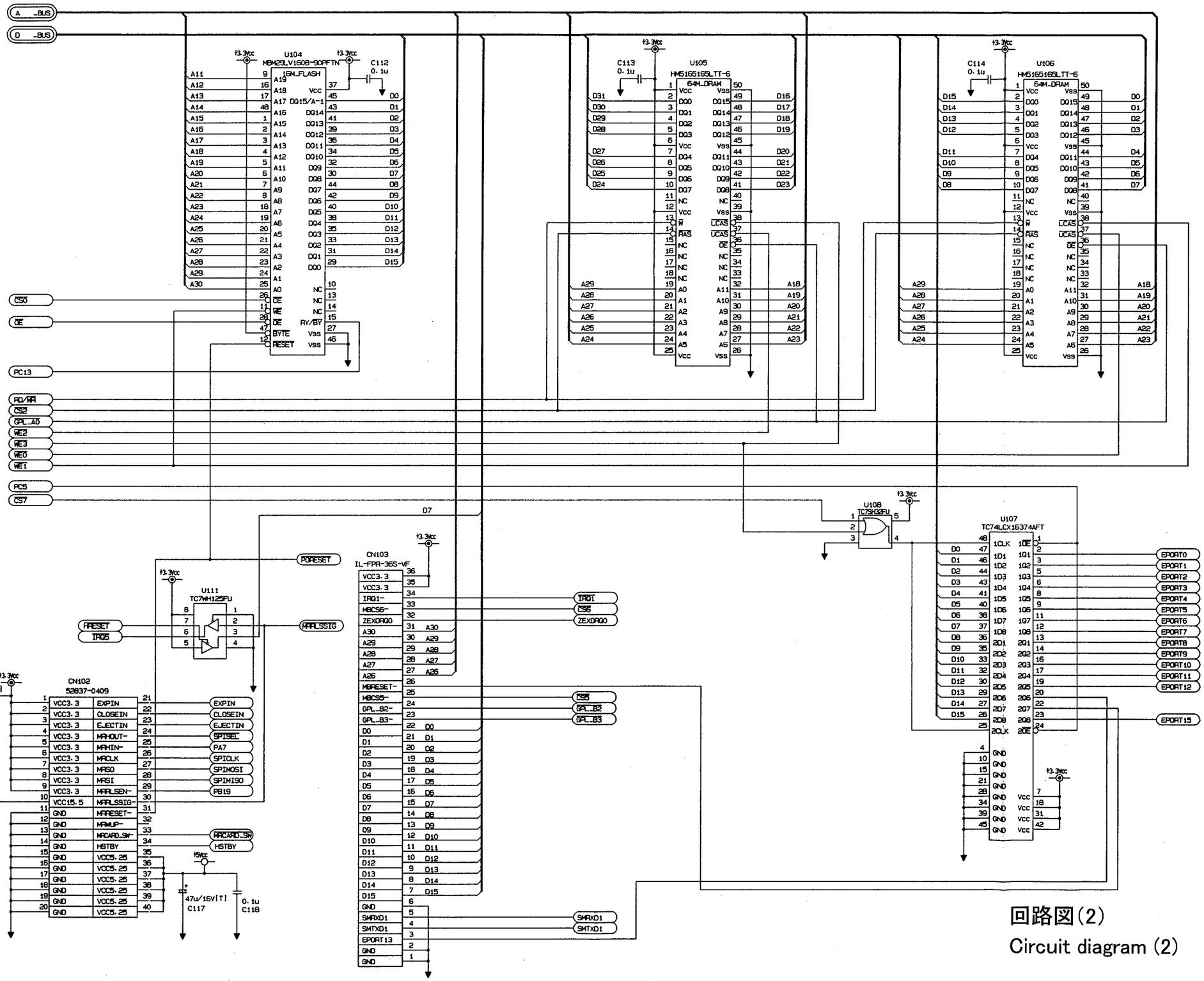

回路図(2)
Circuit diagram (2)

圧縮記録基板
COMPRESSION MEMORY PCB

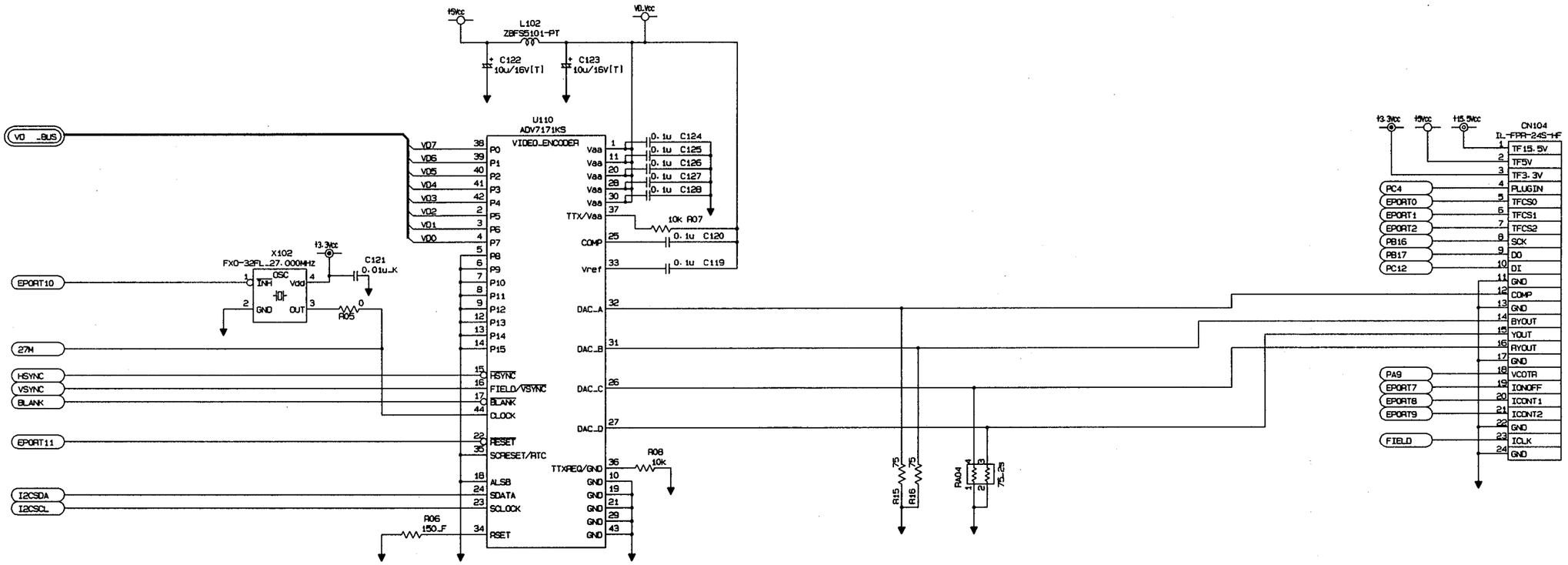

回路図(3)
Circuit diagram (3)

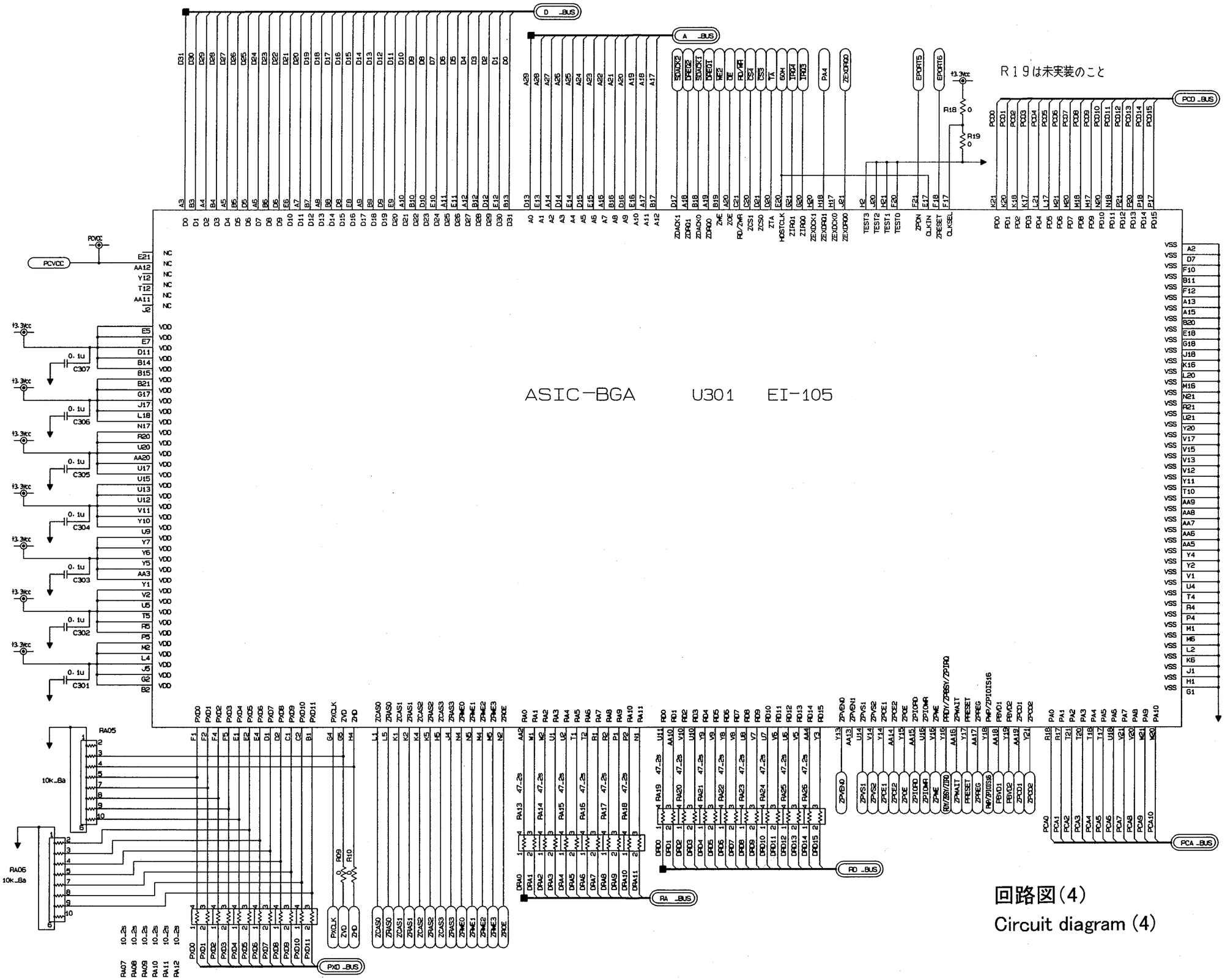

回路図(4)
Circuit diagram (4)

圧縮記録基板
COMPRESSION MEMORY PCB

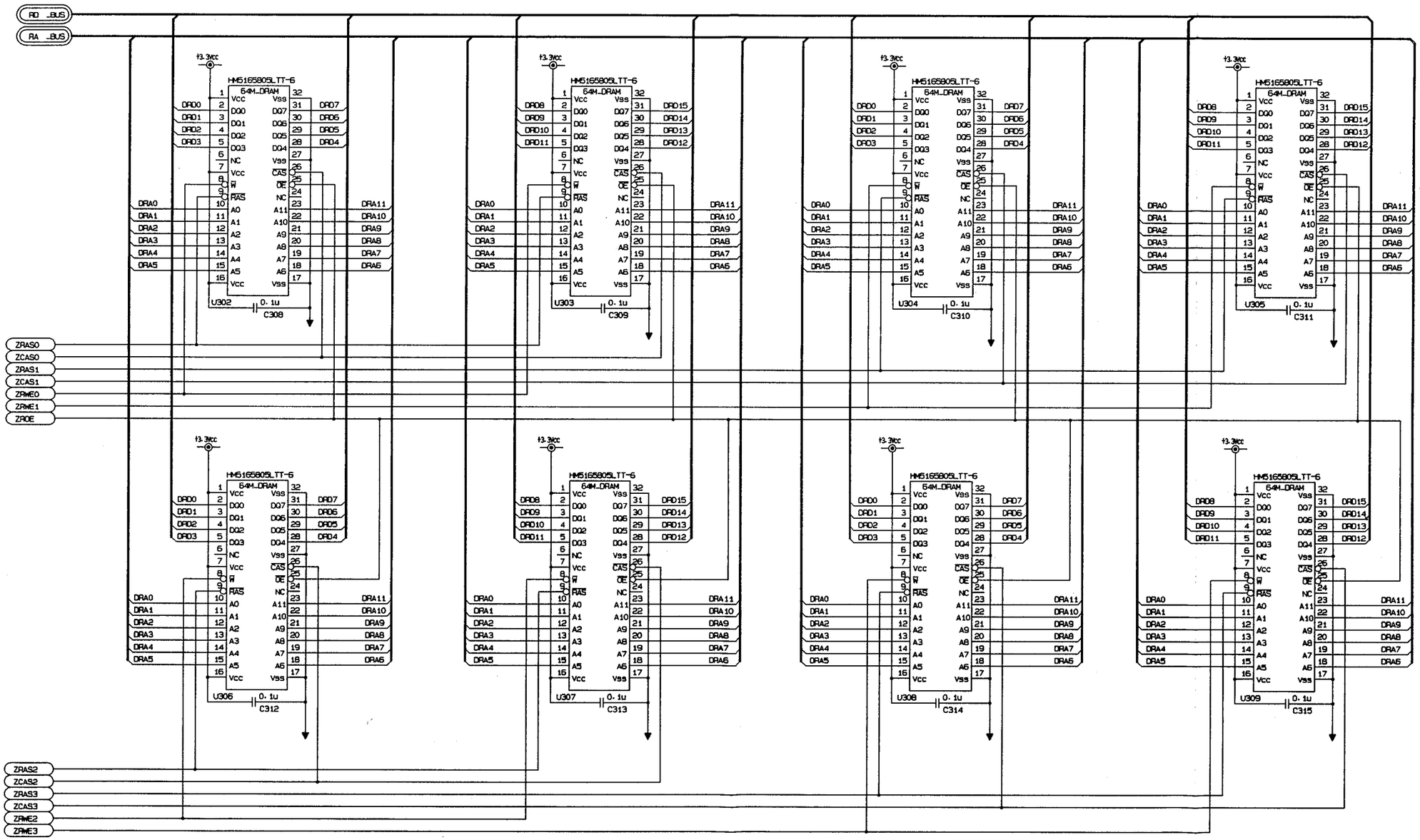

回路図(5)
Circuit diagram (5)

圧縮記録基板
COMPRESSION MEMORY PCB

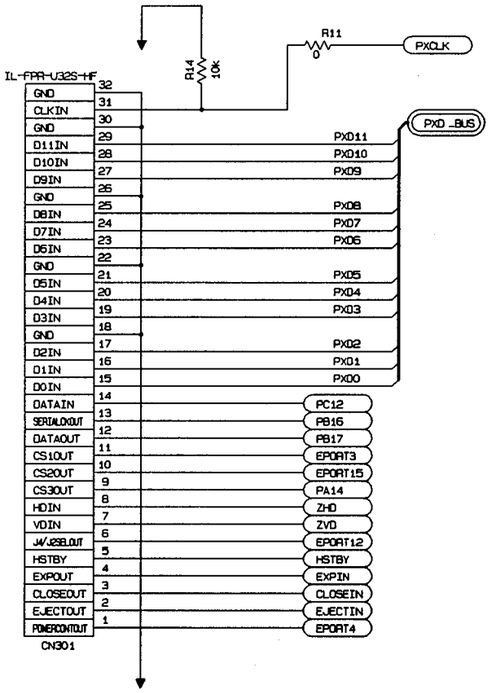

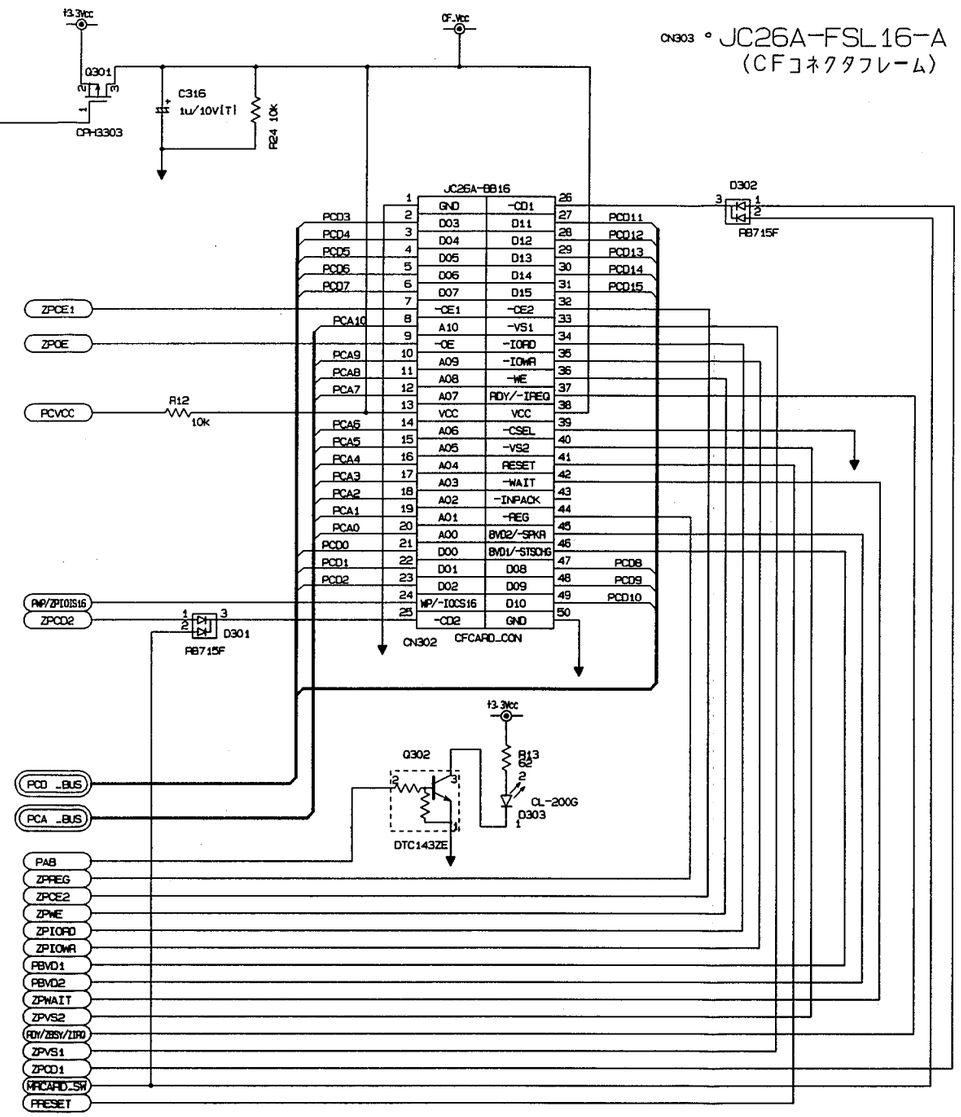

回路図(6)
Circuit diagram (6)

圧縮記録基板
COMPRESSION MEMORY PCB

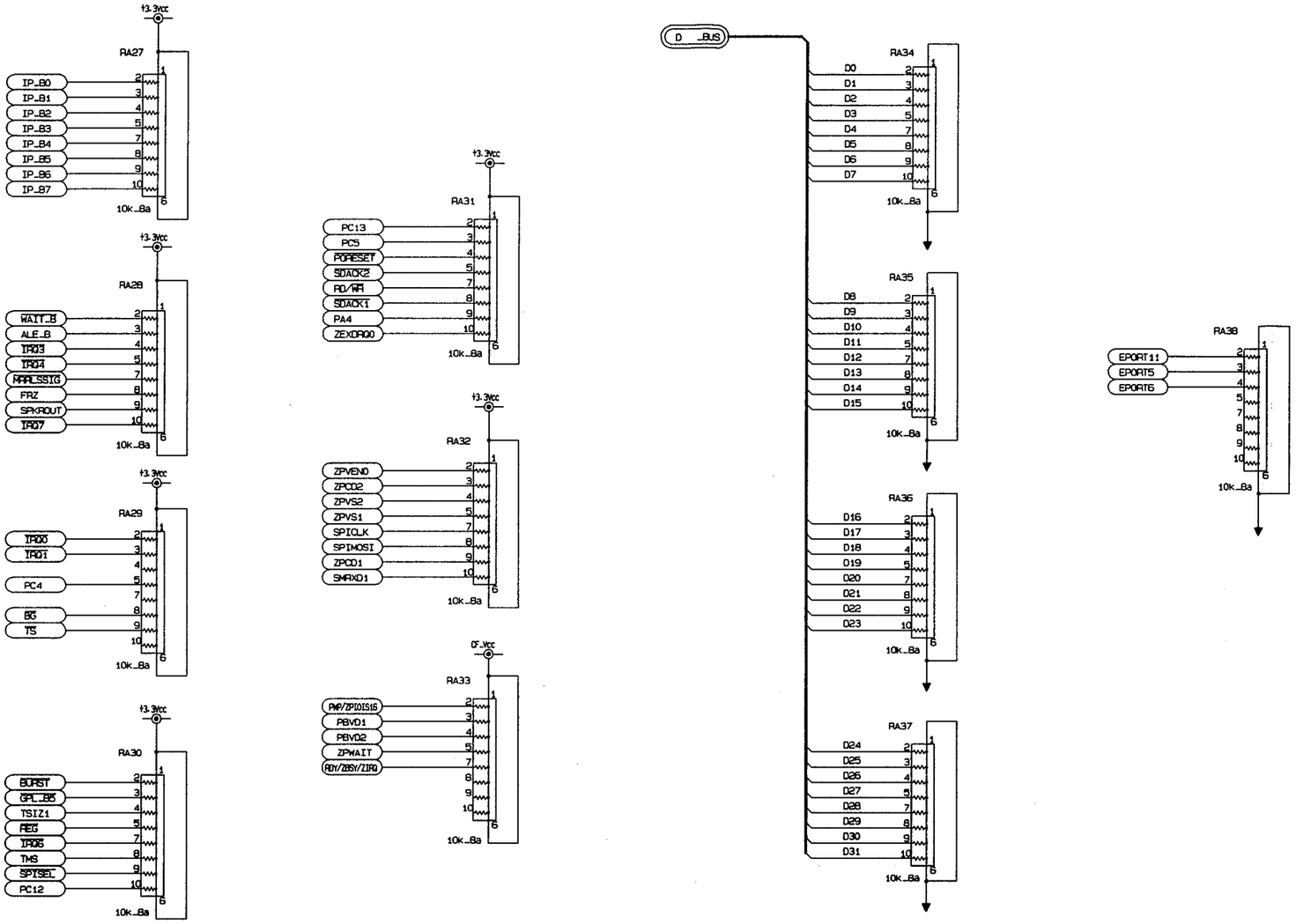

回路図(7)
Circuit diagram (7)

圧縮記録基板
COMPRESSION MEMORY PCB

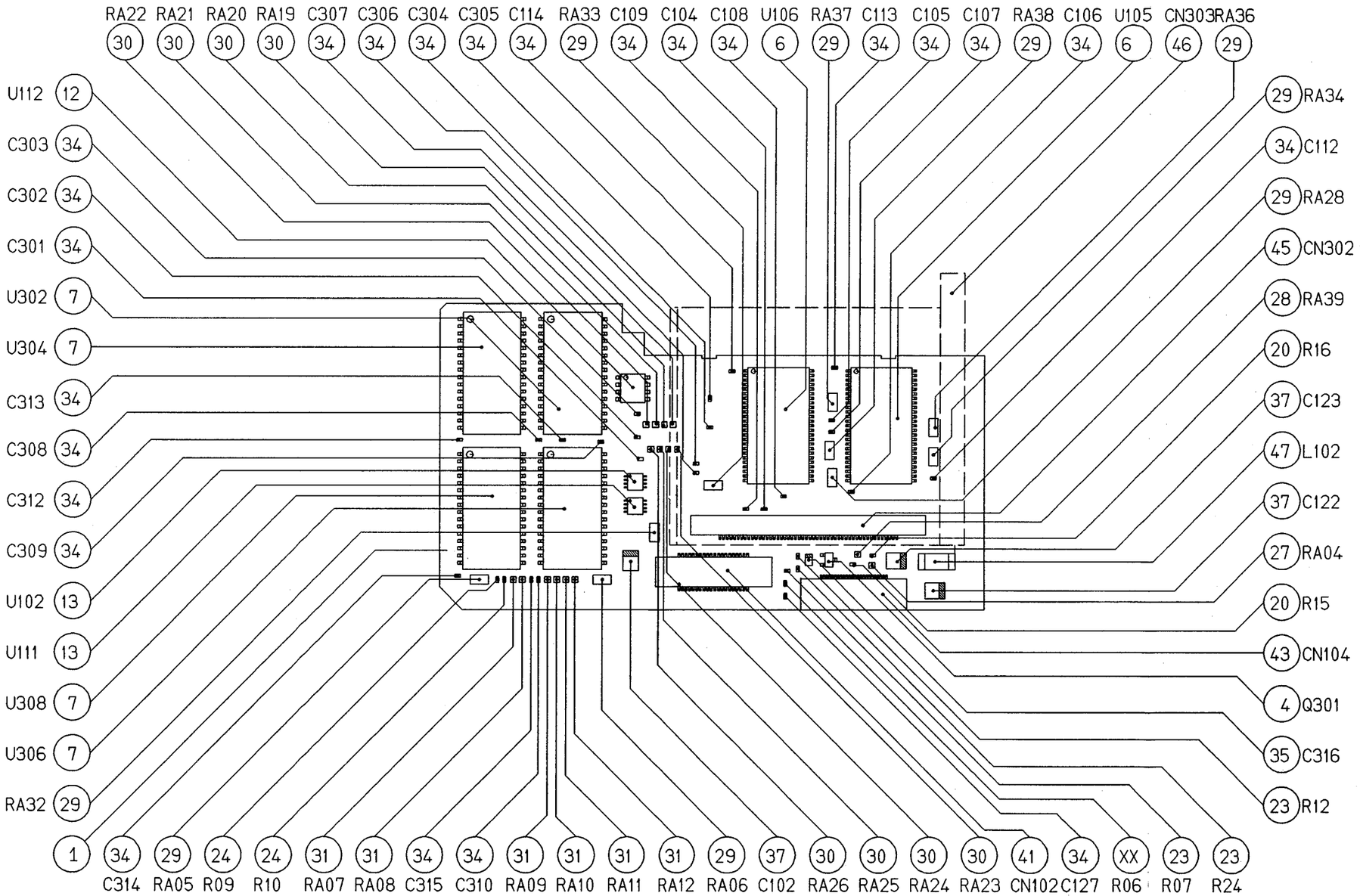

表面部品実装図
Surface parts mount figure

圧縮記録基板
COMPRESSION MEMORY PCB

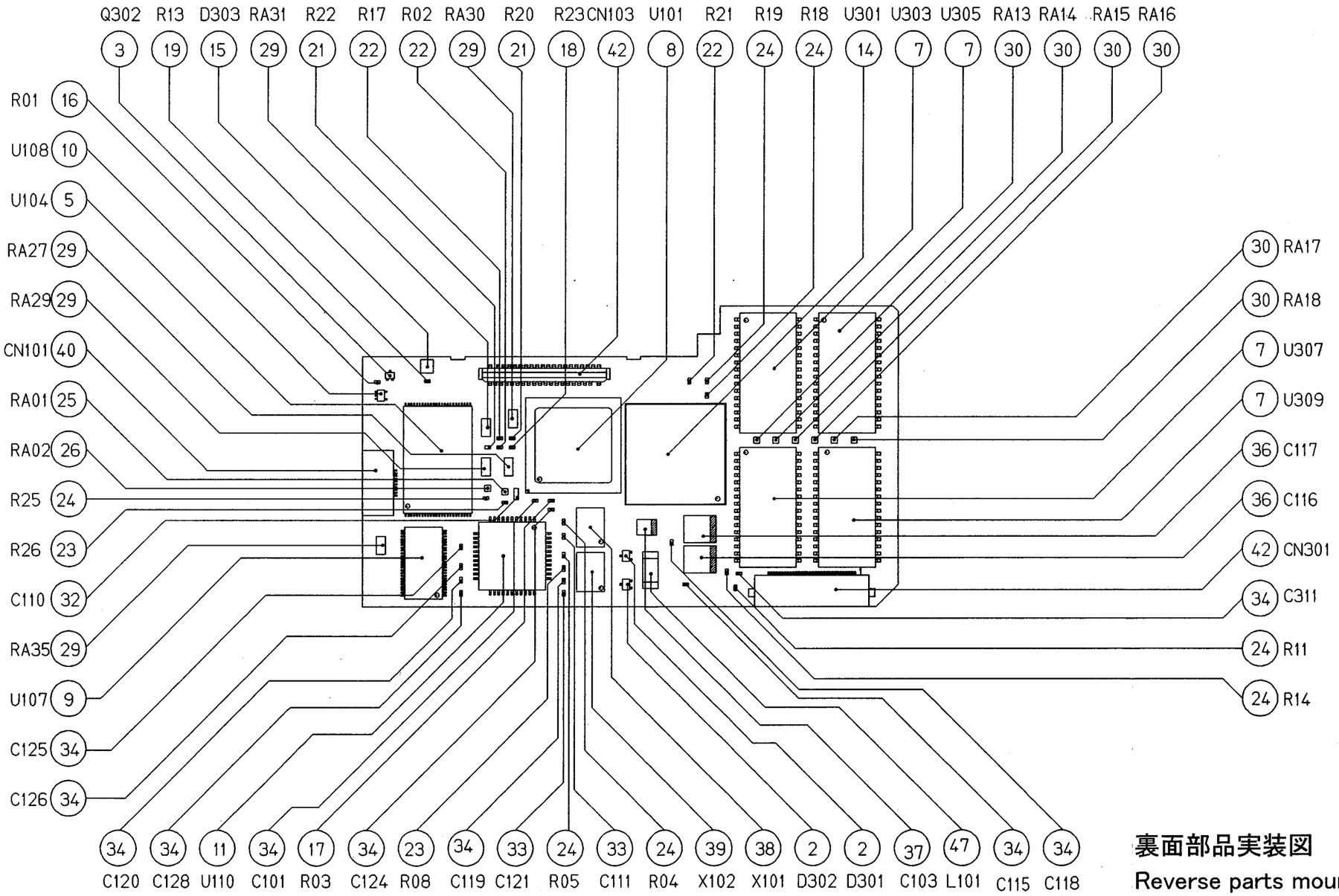

裏面部品実装図
Reverse parts mount figure

上カバーFPC
TOP COVER FPC

回路図
Circuit diagram

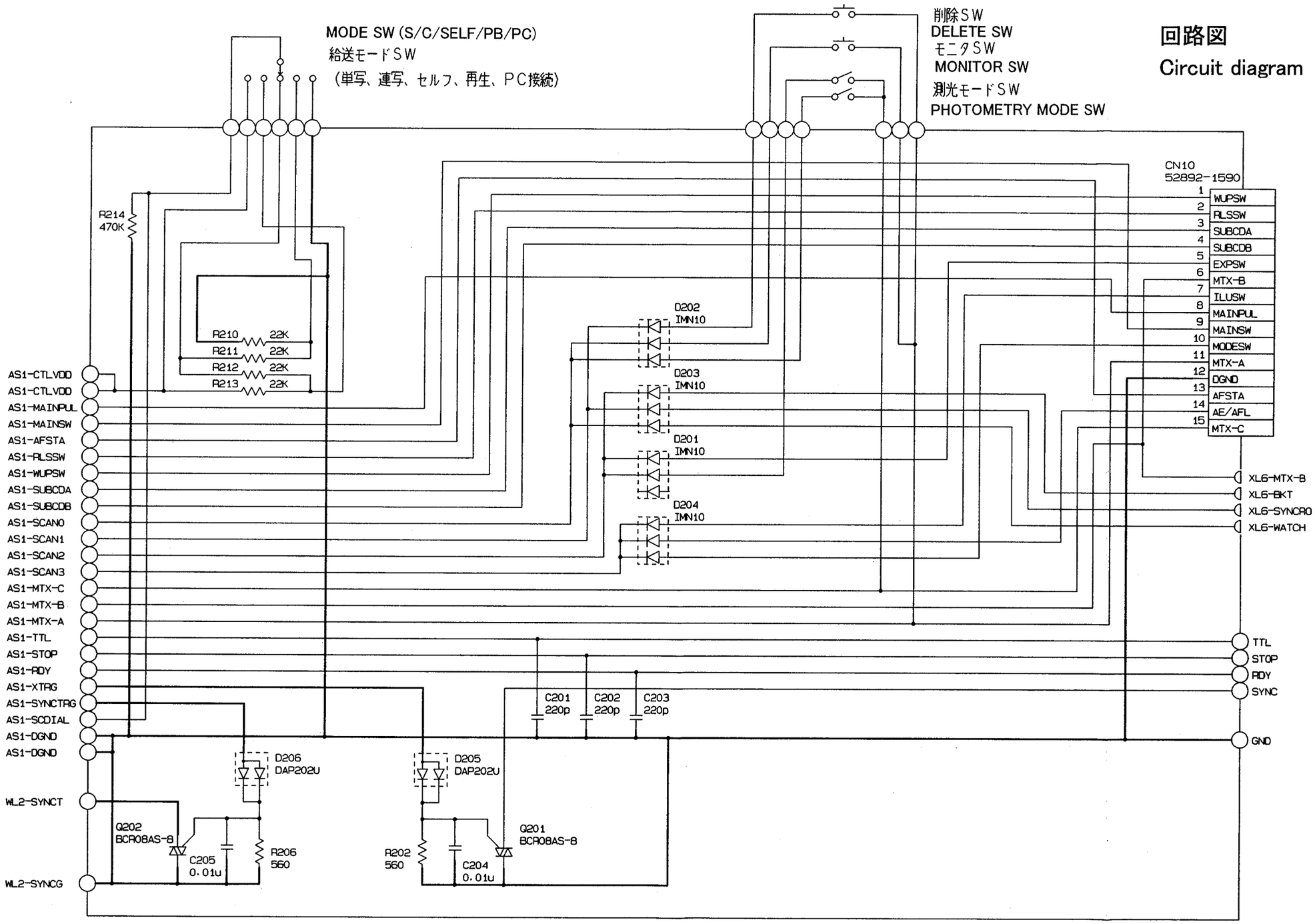

上カバーFPC
TOP COVER FPC

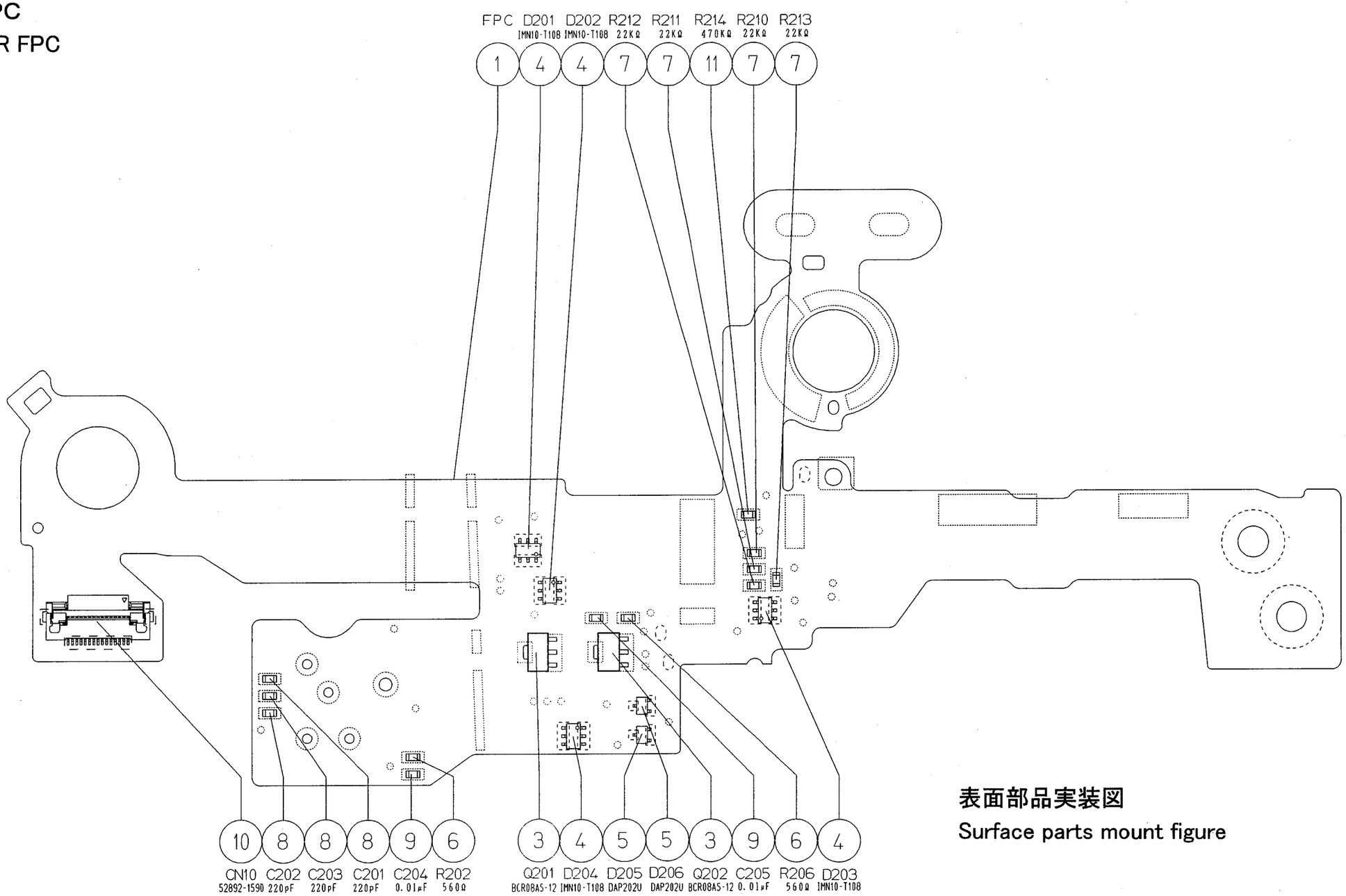

表面部品実装図
Surface parts mount figure

上カバーFPC
TOP COVER FPC

表面パターン図
Surface pattern figure

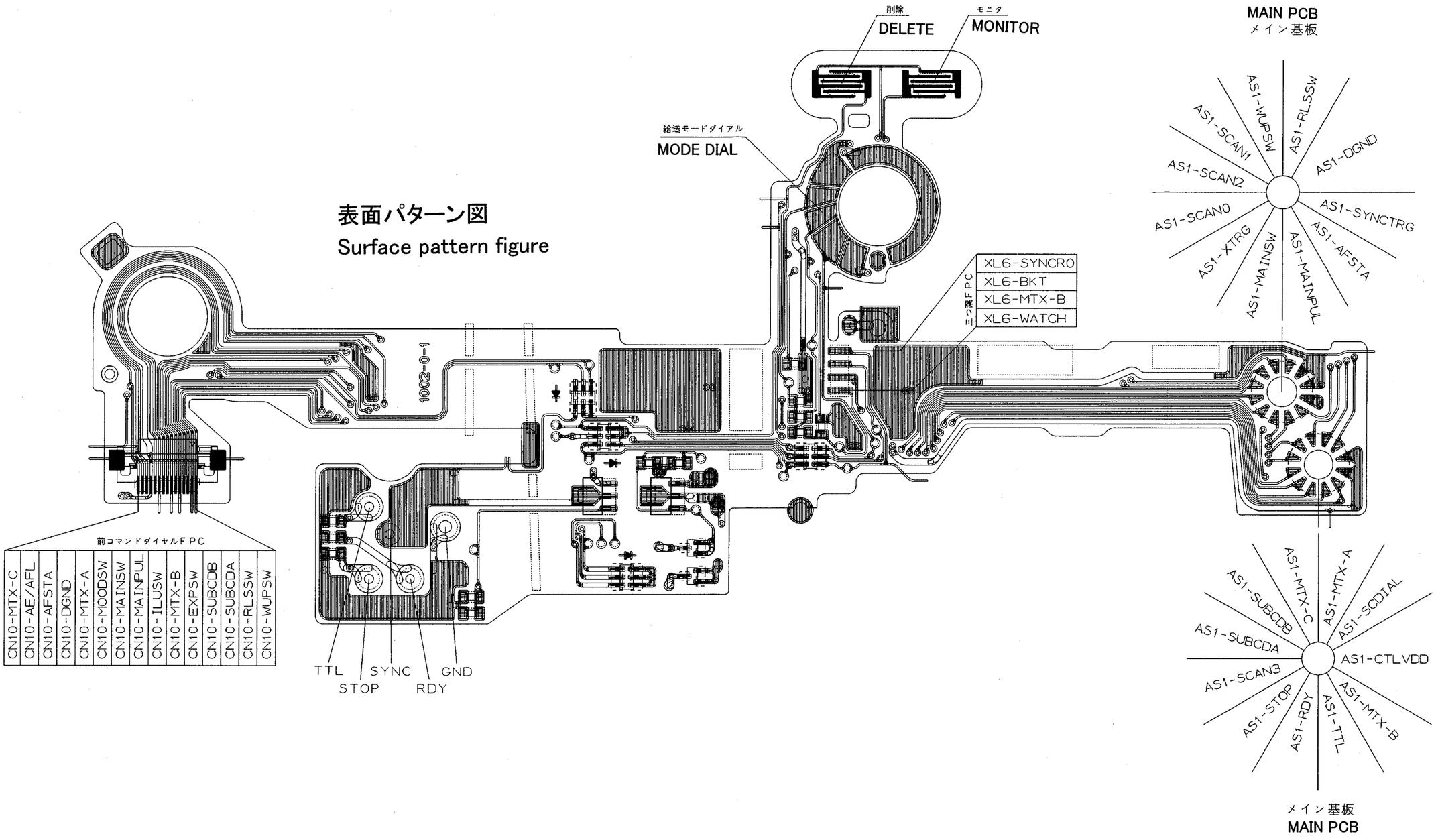

上カバーFPC
TOP COVER FPC

裏面パターン図
Reverse pattern figure

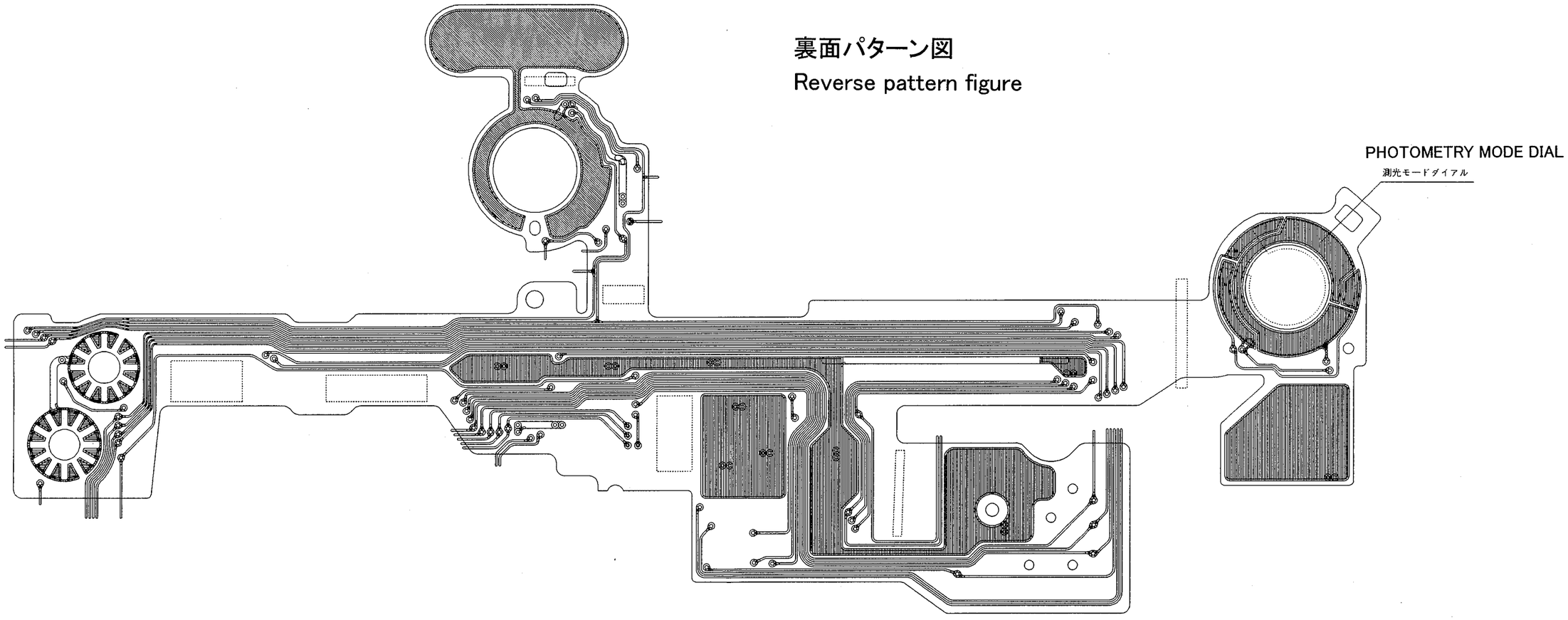

巻き戻し側中継FPC
REWIND CONNECTION FPC

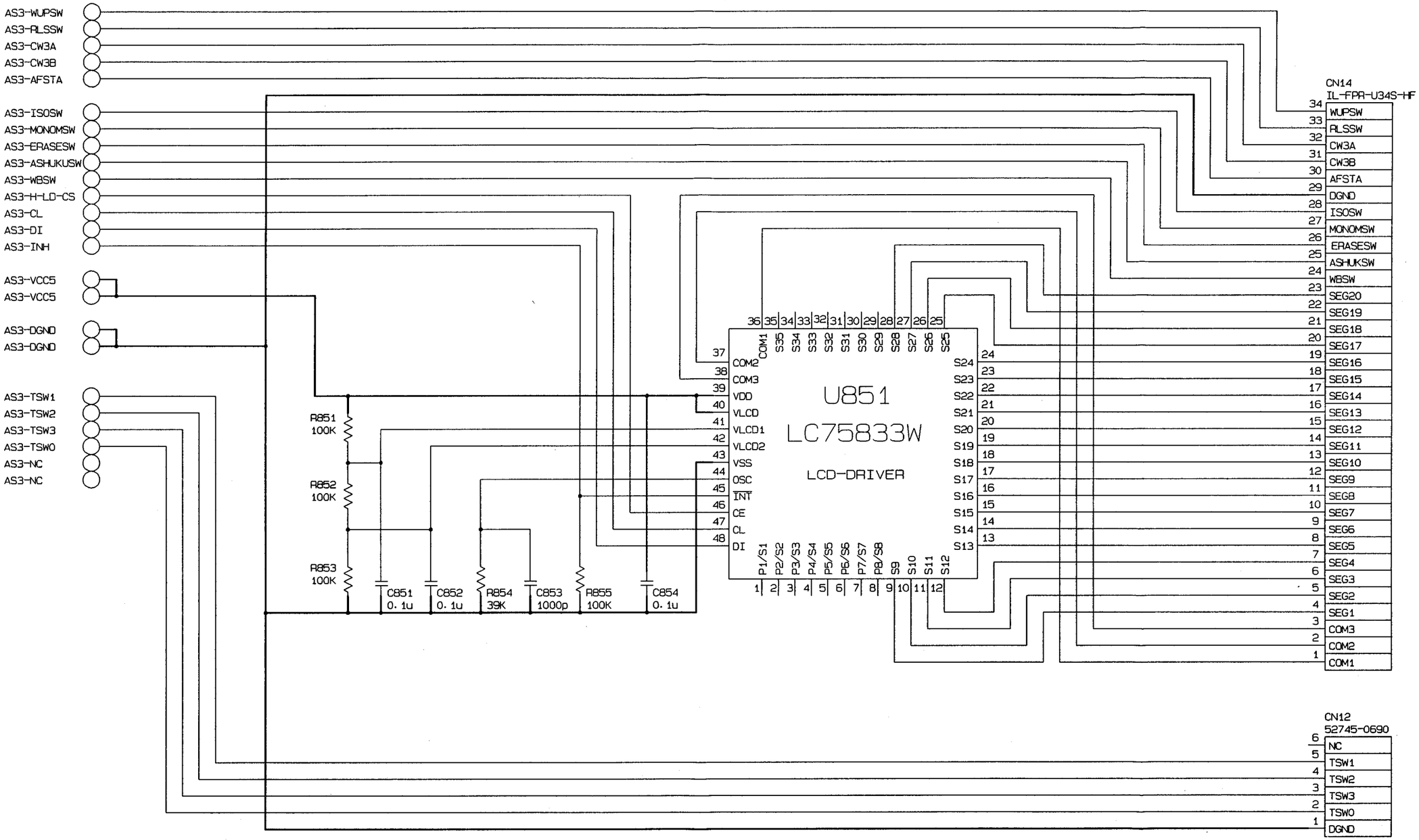

回路図
Circuit diagram

巻き戻し側中継FPC
REWIND CONNECTION FPC

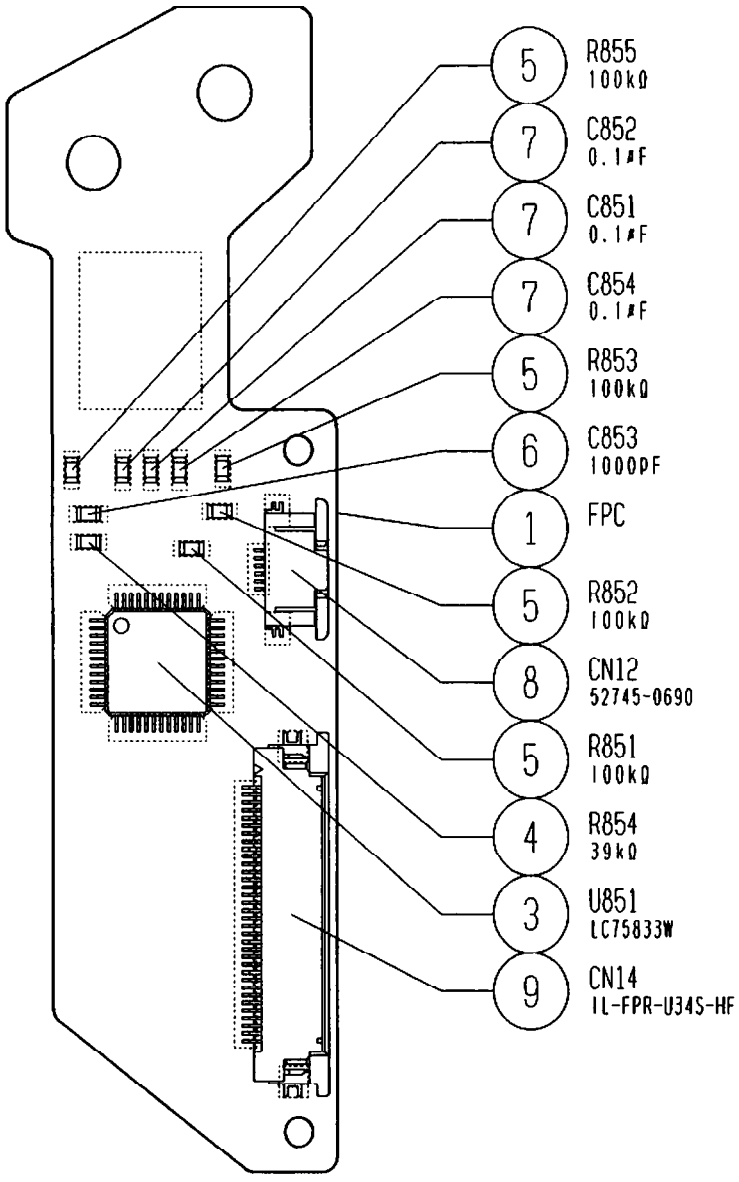

表面部品実装図
Surface parts mount figure

巻き戻し側中継FPC
REWIND CONNECTION FPC

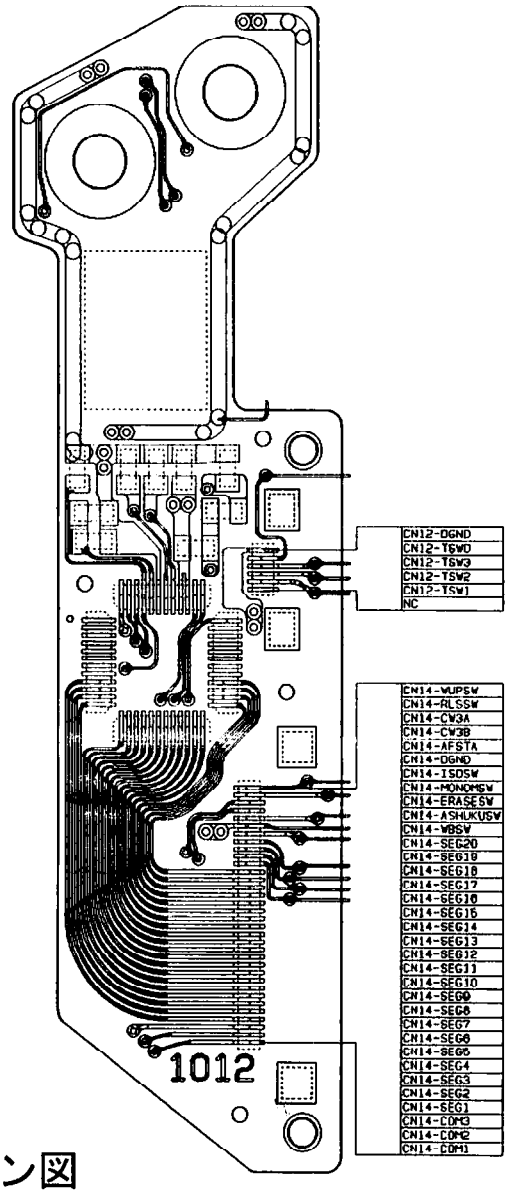

表面パターン図
Surface pattern figure

巻き戻し側中継FPC
REWIND CONNECTION FPC

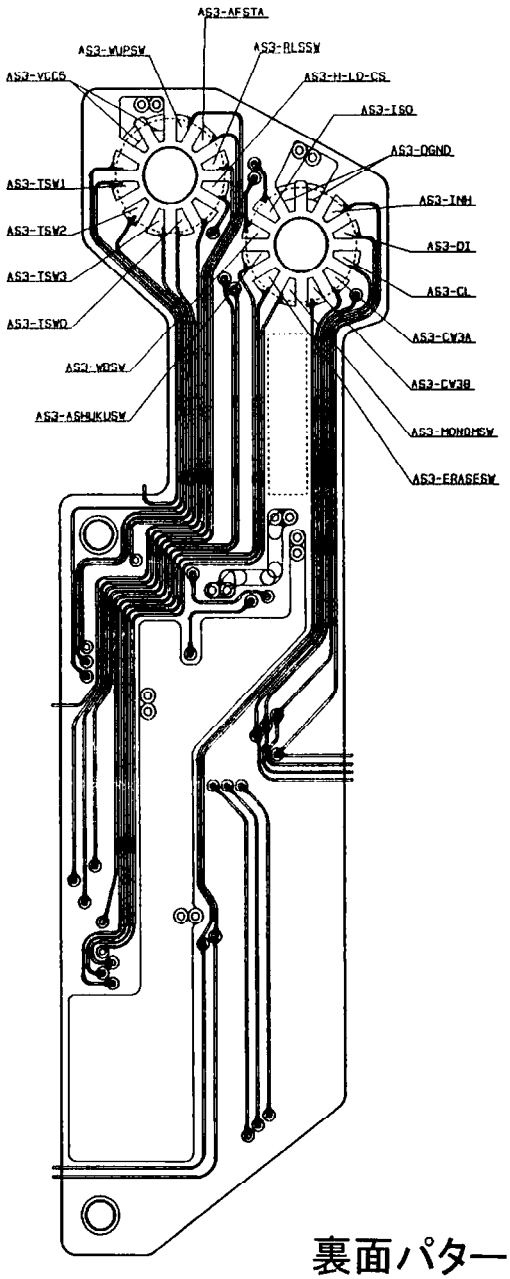

裏面パターン図
Reverse pattern figure

10ピンターミナルFPC
10PIN TERMINAL FPC

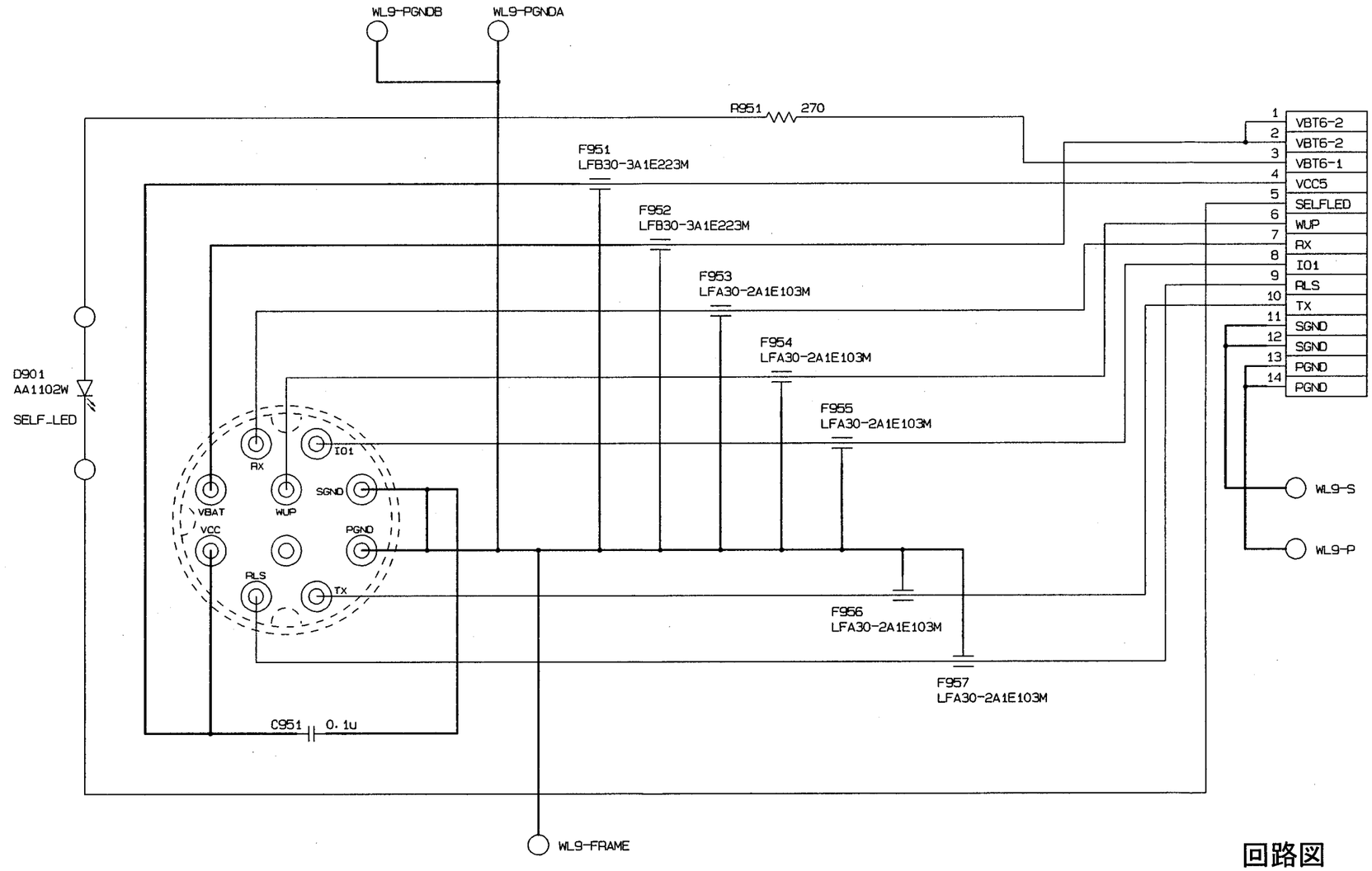

回路図
Circuit diagram

10ピンターミナルFPC
10PIN TERMINAL FPC

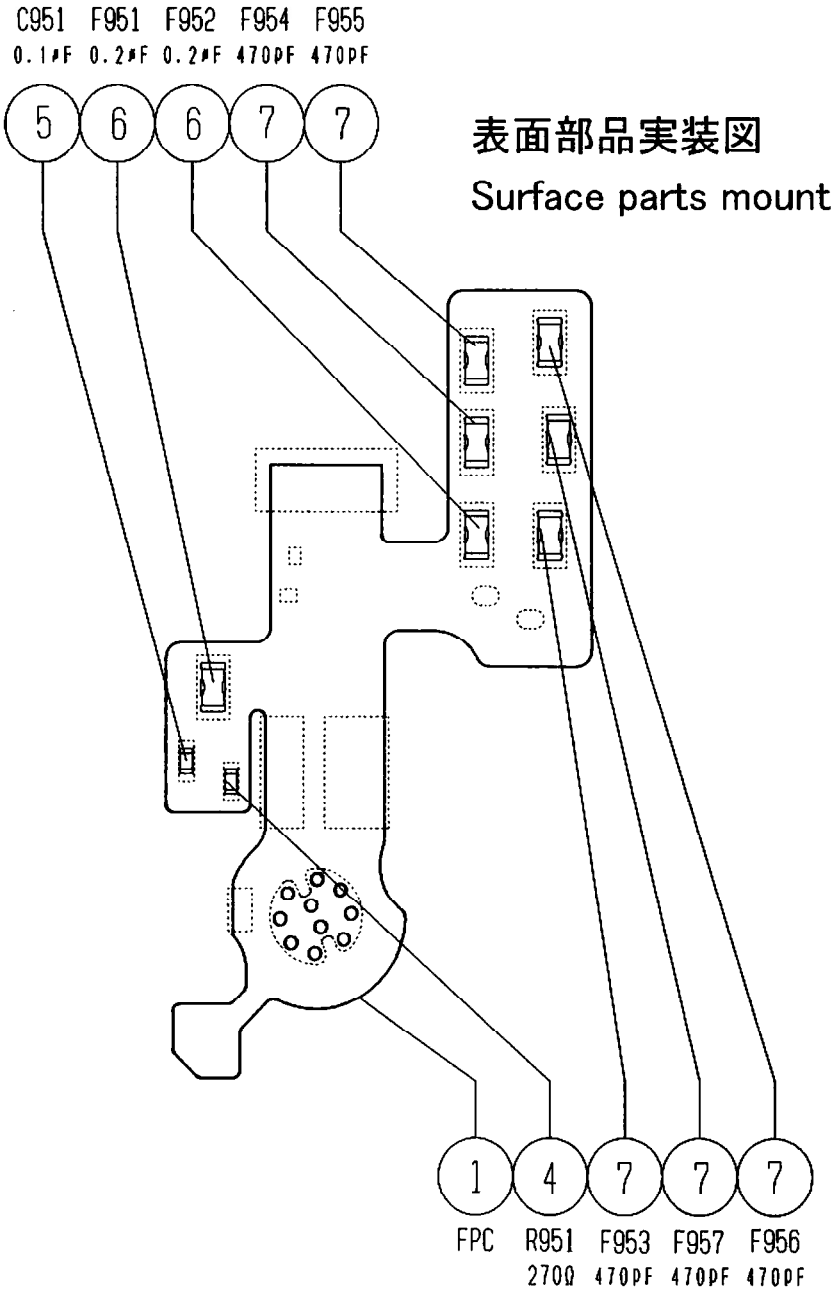

10ピンターミナルFPC
10PIN TERMINAL FPC

裏面部品実装図
Reverse parts mount figure

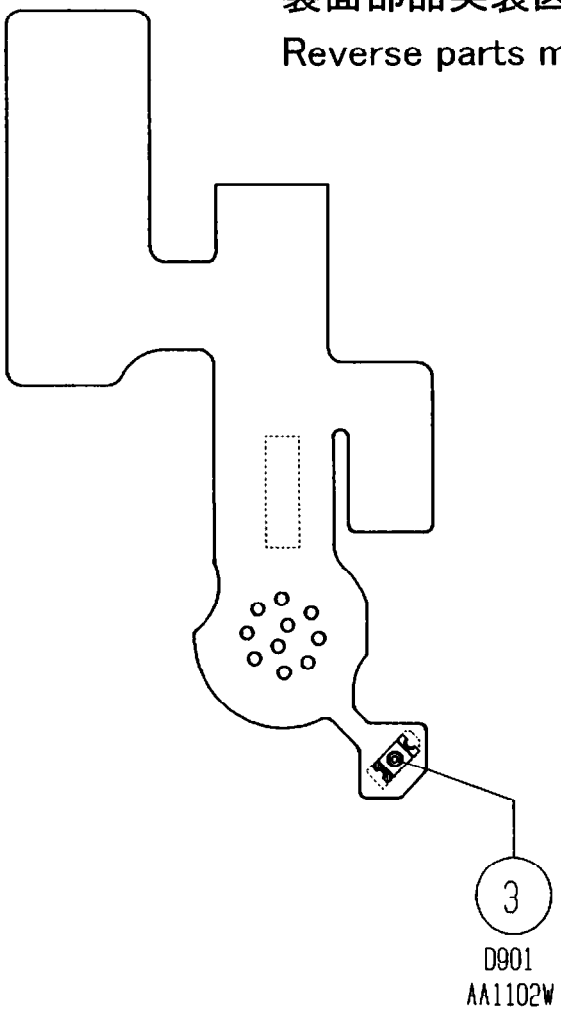

10ピンターミナルFPC
10PIN TERMINAL FPC

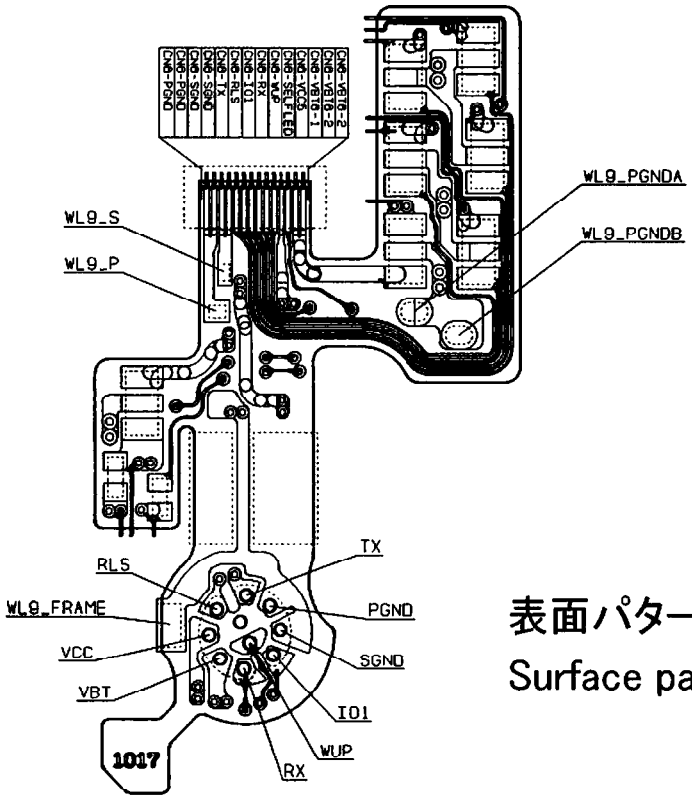

表面パターン図
Surface pattern figure

底カバーFPC
BOTTOM COVER FPC

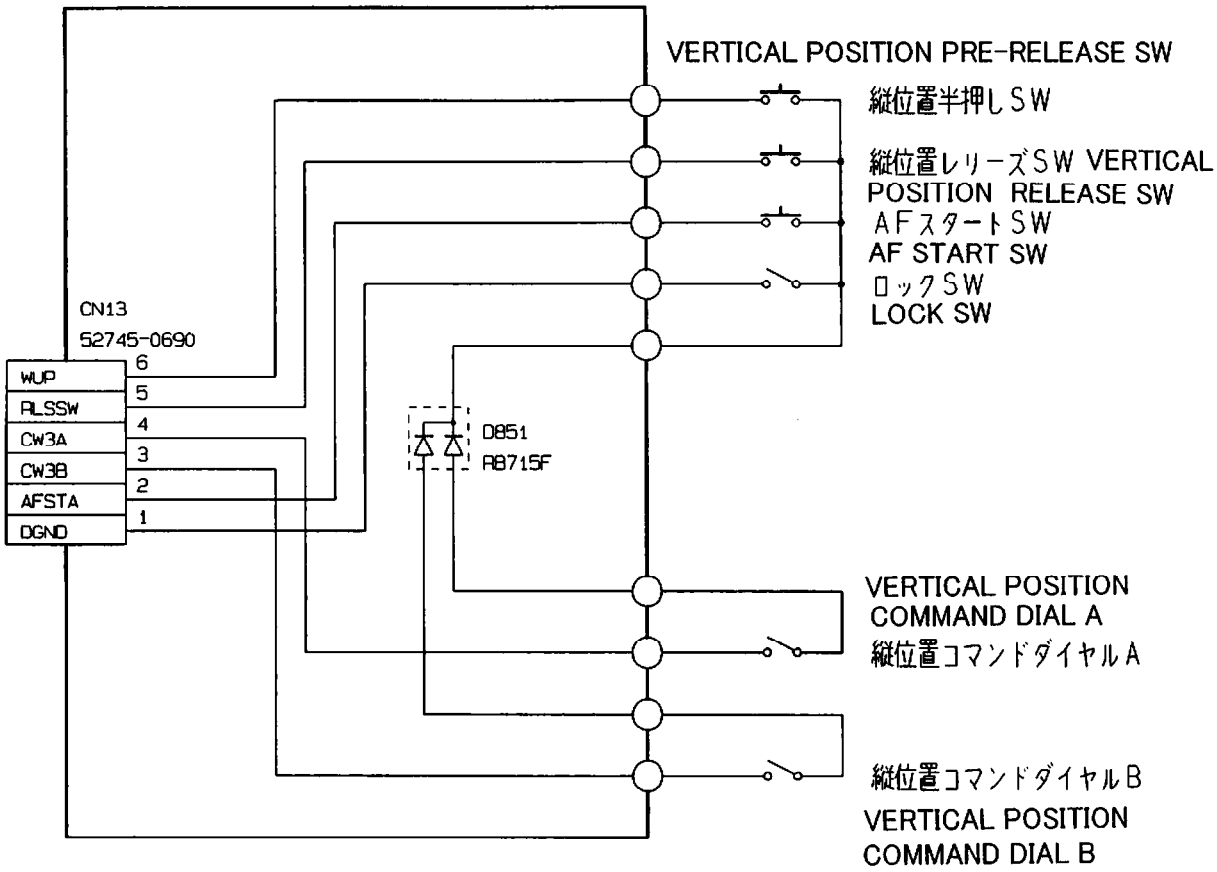

回路図
Circuit diagram

底カバーFPC
BOTTOM COVER FPC

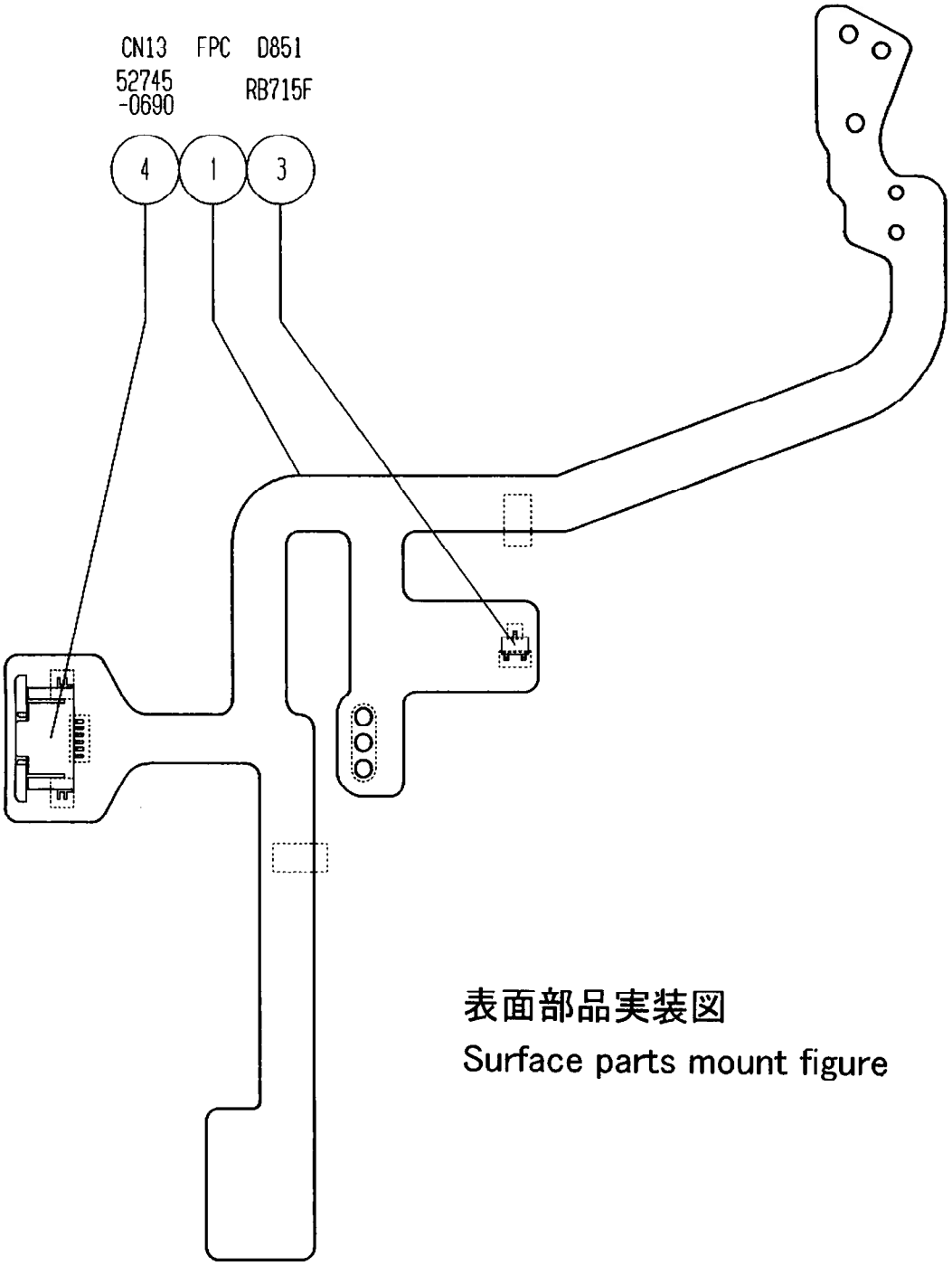

表面部品実装図
Surface parts mount figure

底カバーFPC
BOTTOM COVER FPC

表面パターン図
Surface pattern figure

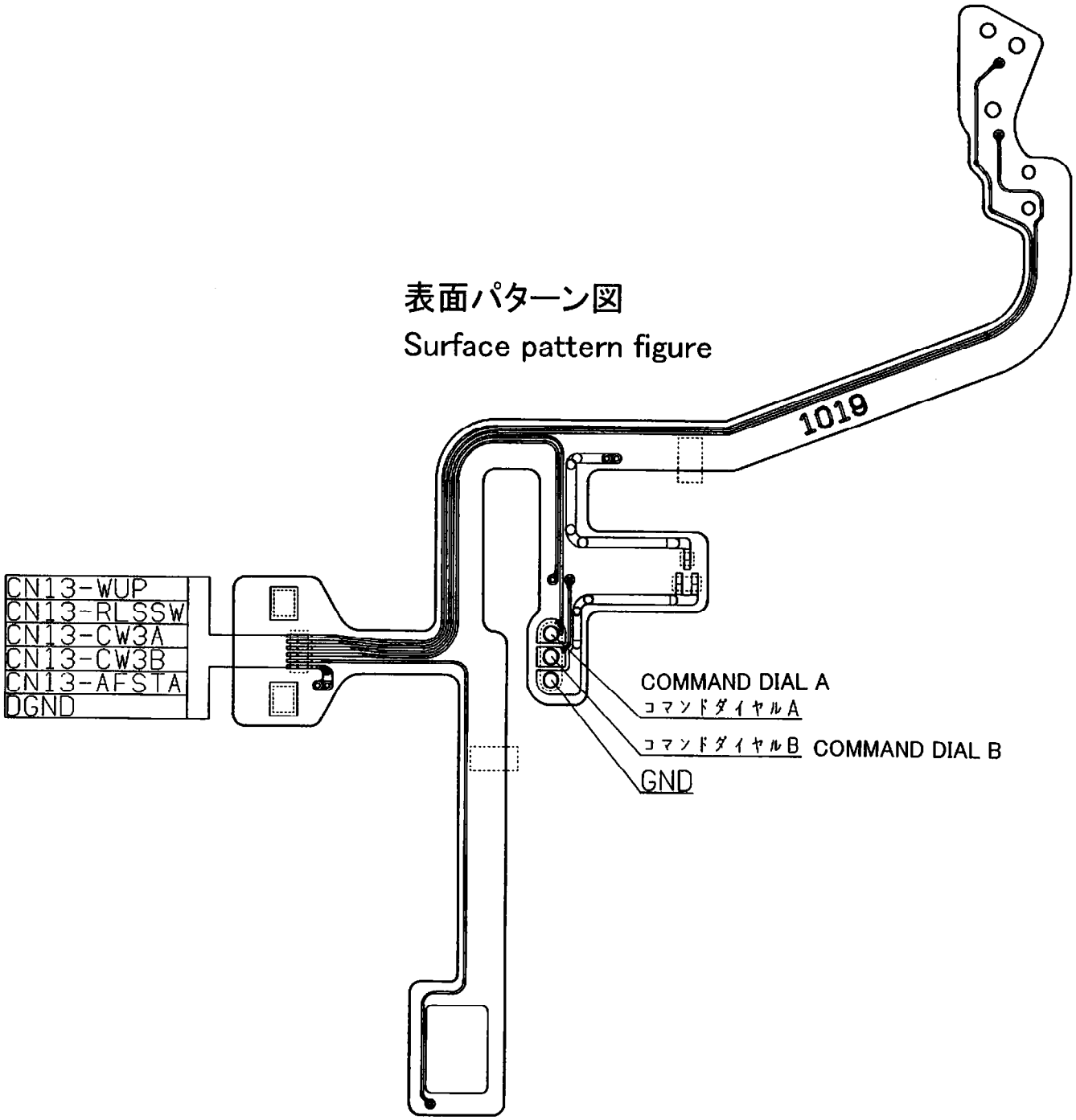

底カバーFPC
BOTTOM COVER FPC

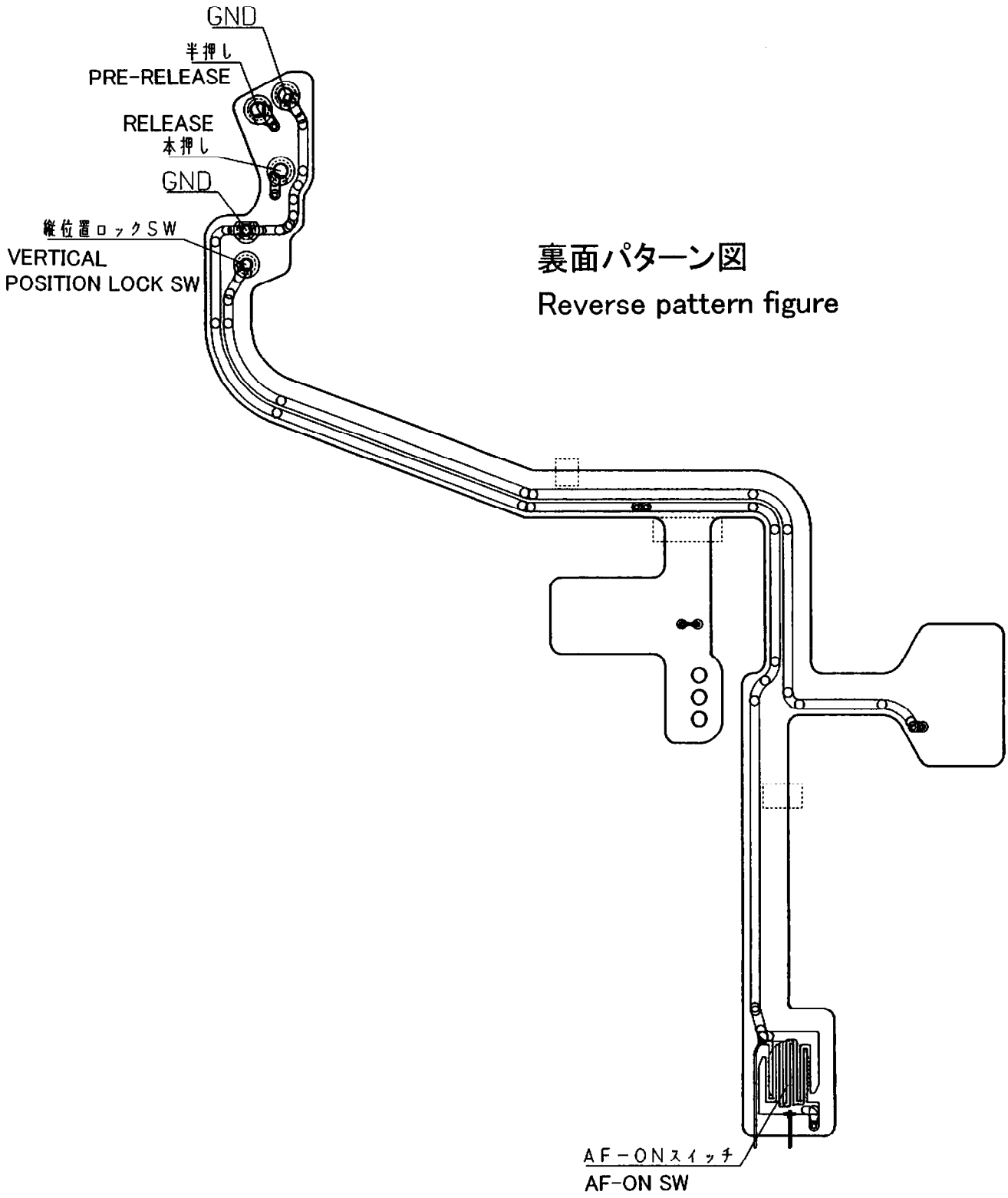

DC／DC基板
DC/DC PCB

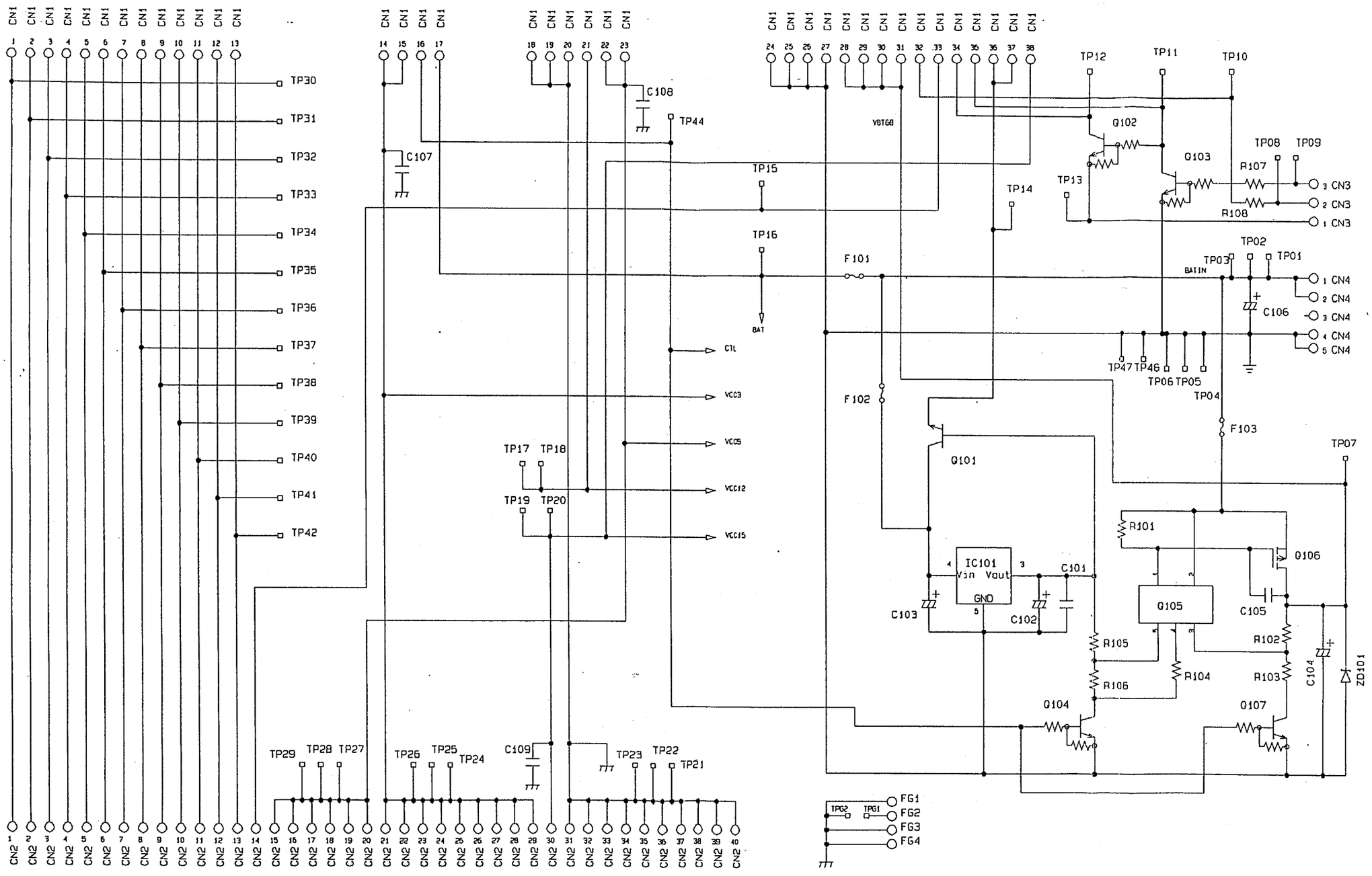

回路図(1)
Circuit diagram (1)

DC／DC基板
DC/DC PCB

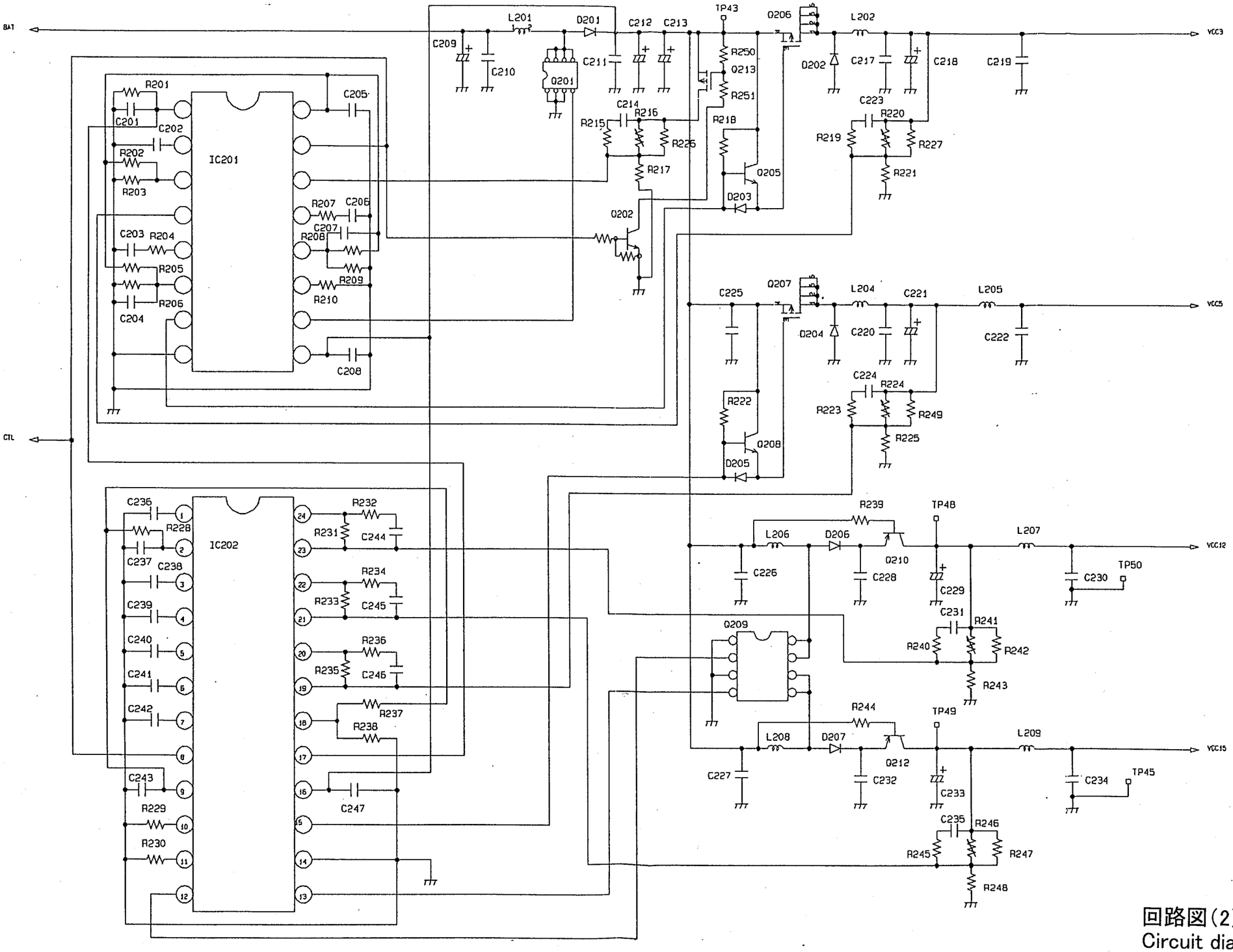

回路図(2)
Circuit diagram (2)

DC／DC基板
DC/DC PCB

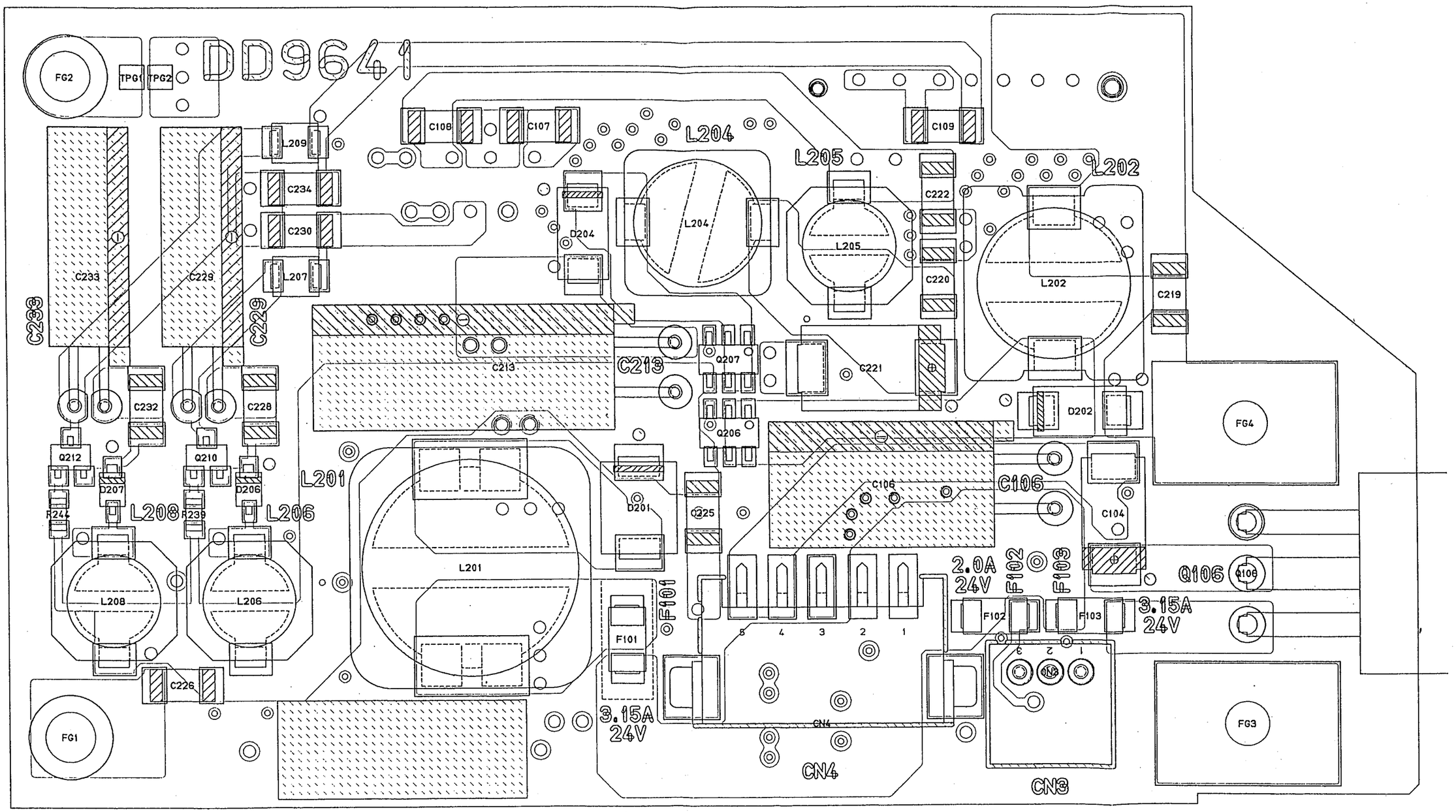

表面部品実装図
Surface parts mount figure

DC／DC基板
DC/DC PCB

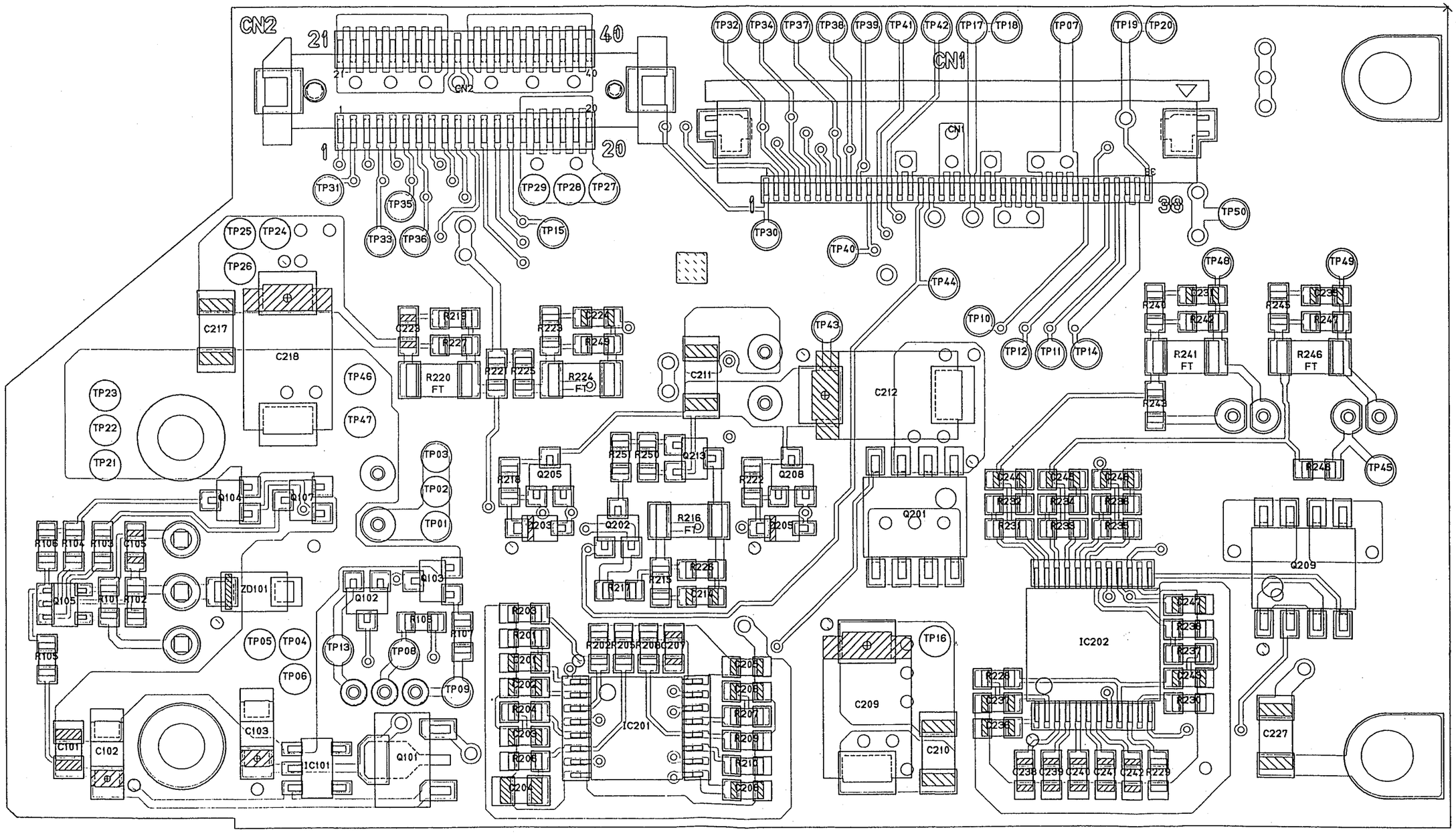

裏面部品実装図
Reverse parts mount figure

サービス
計画課
M

ＣＣＤ電源基板
CCD POWER PCB

Connector コネクタ	Pin No. ピンNo.	The name of terminal 端子名称	Remarks 概　要
TP	1	Vcc6	出力Ｆ(アナログ　6V) Outout F (analog 6V)
	2	GND7	電源-出力（アナログＧＮＤ　出力Ｆ） Power source - output (analog GND, output F)

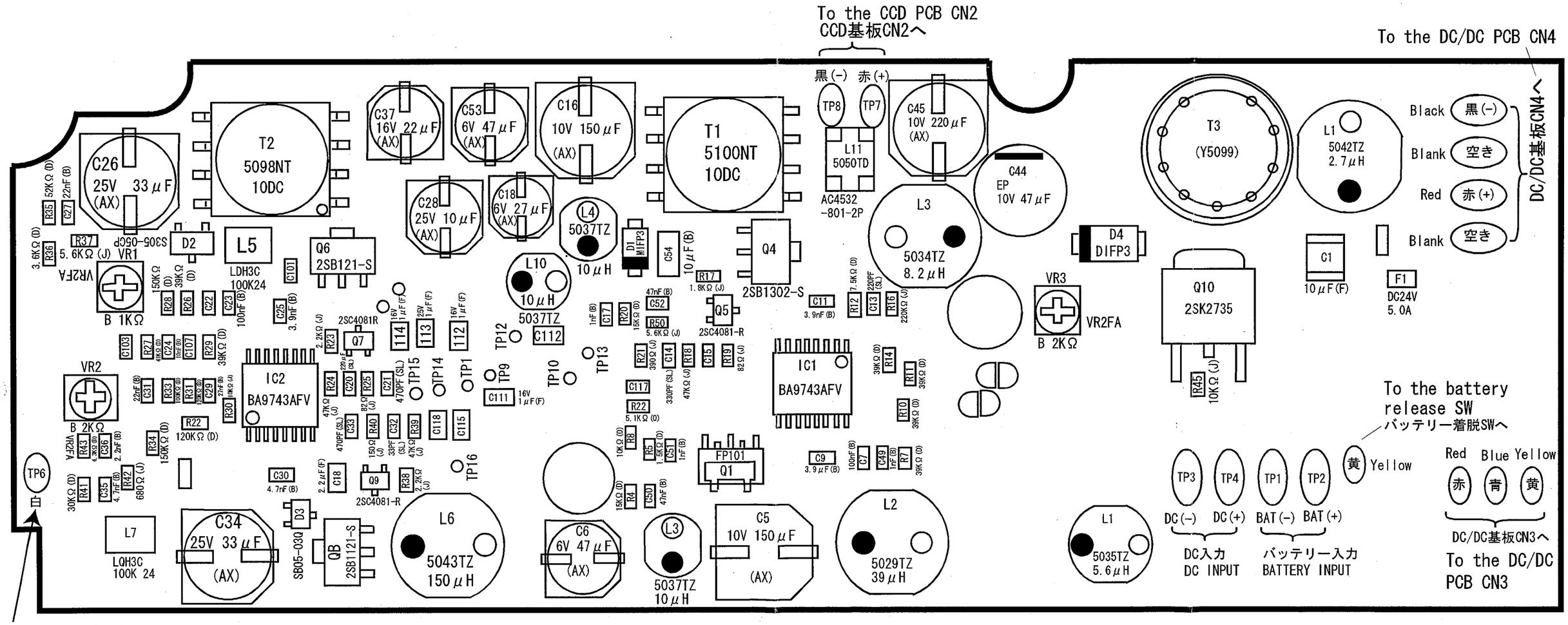

表面実装図
Surface parts mount figure

Additional page (追加頁)

サービス計画課 M

Nov. 18, 1999

ＣＣＤ電源基板
CCD POWER PCB

Connector コネクタ	Pin No. ピンNo.	The name of terminal 端子名称	Remarks 概　要	
Connector 2 コネクタ２ 53475-0209	1,11	POWER-CTL	Output control (DCDC starting under the high voltage, DCDC in stand-by mode the low voltage) 出力コントロール（Ｈ時DCDC起動、Ｌ時DCDC待機）	
	2,12	ＶＬ	出力Ｅ（アナログ９Ｖ）	Output E (analog 9V)
	3,13	ＧＮＤ６	電源一出力（アナログＧＮＤ、出力Ｄ、出力Ｅ）	Power source - output (analog GND, output D,output E)
	4,14	Ｖｃｃ１７	出力Ｄ（アナログ＋１７Ｖ）	Output D (analog + 17V)
	5,15	ＧＮＤ５	電源一出力（アナログＧＮＤ＋出力Ｂ）	Power source - output (analog GND, output B)
	6,16	Ｖｃｃ５Ａ	出力Ｂ（アナログ＋５Ｖ）	Output B (analog + 5V)
	7,17	ＧＮＤ３	電源一出力（デジタルＧＮＤ　出力Ａ）	Power source - output (digital GND, output A)
	8,18	Ｖｃｃ３	出力Ａ（デジタル＋３．３Ｖ）	Output A (digital GND + 3.3V)
	9,19	ＧＮＤ４	電源一出力（デジタルＧＮＤ　出力Ｃ）	Power source - output (digital GND, output C)
	10,20	Ｖｃｃ５Ｄ	出力Ｃ（デジタル＋５Ｖ）	Output C (digital + 5V)

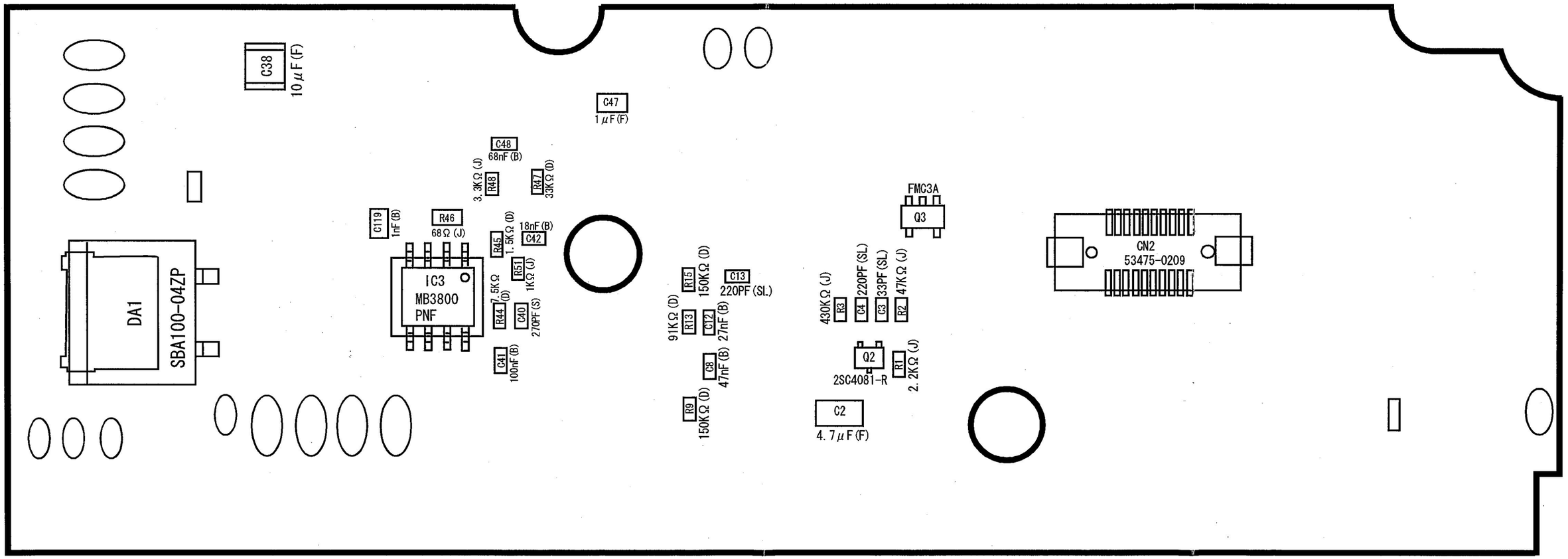

裏面実装図
Reverse parts mount figure

Additional page (追加頁)

サービス計画課 M

Nov. 18, 1999

D1 EEPROM MAP

ADDRESS	CONTENTS	△1 VER.1.24 or Previous VER		REMARKS
0 (0000)	CAMERA CONTROL DATA	—		
|		|		
99 (0063)		—		
100 (0064)	UNUSED			
|				
255 (00FF)				
256 (0100)	CAMERA CONTROL DATA	—		
|		|		
423 (01A7)		—		
424 (01A8)	ERROR RECORD	—		
|		|		
1023 (03FF)		—		
1024 (0400)	AF ADJUSTMENT	—		
|		|		
△1 2475 (09AB)		—		
△1 2476 (09AC)	UNUSED			
|				
2815 (0AFF)				
2816 (0B00)	CAMERA CONTROL DATA	—		
|		|		
2949 (0B85)		—		
2950 (0B86)	CHECK SUM DATA	—		
2951 (0B87)	UNUSED			
|				
3071 (0BFF)				
3072 (0C00)	CHECK SUM DATA	—		
3073 (0C01)	TTL PRE FLASH LEVEL	—		
|		|		
3077 (0C05)		—		
3078 (0C06)	TTL MONITOR PRE FLASH GAMMA	—		
3079 (0C07)	CAMERA CONTROL DATA	36 (24)		
3080 (0C08)	TTL ADJUSTMENT	—		
3081 (0C09)	〃	—		
3082 (0C0A)	CAMERA CONTROL DATA	0 (00)		

△1 ×4 Change page

ADDRESS	CONTENTS	⚠1 VER.1.24 or Previous VER		REMARKS
3083 (0C0B)	CAMERA CONTROL DATA	48 (30)		
3084 (0C0C)	〃	32 (20)		
3085 (0C0D)	〃	16 (10)		
3086 (0C0E)	〃	5 (05)		
3087 (0C0F)	〃	48 (30)		
3088 (0C10)	〃	0 (00)		
3089 (0C11)	〃	216 (D8)		
3090 (0C12)	〃	120 (78)		
3091 (0C13)	〃	0 (00)		
3092 (0C14)	〃	0 (00)		
3093 (0C15)	〃	50 (32)		
3094 (0C16)	〃	44 (2C)		
3095 (0C17)	〃	16 (10)		
3096 (0C18)	〃	5 (05)		
3097 (0C19)	〃	16 (10)		
3098 (0C1A)	〃	5 (05)		
3099 (0C1B)	〃	1 (01)		
3100 (0C1C)	〃	41 (29)		
3101 (0C1D)	〃	66 (42)		
3102 (0C1E)	〃	50 (32)		
3103 (0C1F)	〃	18 (12)		
3104 (0C20)	〃	200 (C8)		
3105 (0C21)	〃	7 (07)		
3106 (0C22)	〃	30 (1E)		
3107 (0C23)	〃	146 (92)		
3108 (0C24)	〃	70 (46)		
3109 (0C25)	〃	150 (96)		
3110 (0C26)	〃	30 (1E)		
3111 (0C27)	〃	60 (3C)		
3112 (0C28)	〃	100 (64)		
3113 (0C29)	〃	0 (00)		
3114 (0C2A)	〃	0 (00)		
3115 (0C2B)	〃	15 (0F)		
3116 (0C2C)	〃	1 (01)		
3117 (0C2D)	〃	80 (50)		
3118 (0C2E)	〃	6 (06)		
3119 (0C2F)	〃	41 (29)		
3120 (0C30)	〃	0 (00)		

ADDRESS	CONTENTS	⚠1 VER.1.24 or Previous VER		REMARKS
3121 (0C31)	CAMERA CONTROL DATA	30 (1E)		
3122 (0C32)	〃	5 (05)		
3123 (0C33)	〃	10 (0A)		
3124 (0C34)	〃	185 (B9)		
3125 (0C35)	TEMPERATURE DETECTION ADJUSTMENT DATA	—		
3126 (0C36)	〃	—		
3127 (0C37)	〃	—		
3128 (0C38)	CAMERA CONTROL DATA	0 (00)		
3129 (0C39)	〃	0 (00)		
3130 (0C3A)	〃	0 (00)		
3131 (0C3B)	〃	0 (00)		
3132 (0C3C)	〃	18 (12)		
3133 (0C3D)	〃	132 (84)		
3134 (0C3E)	BC ADJUSTMENT	—		
3135 (0C3F)	〃	—		
3136 (0C40)	CAMERA CONTROL DATA	28 (1C)		
3137 (0C41)	〃	82 (52)		
3138 (0C42)	〃	26 (1A)		
3139 (0C43)	〃	144 (90)		
3140 (0C44)	〃	27 (1B)		
3141 (0C45)	〃	238 (EE)		
3142 (0C46)	〃	26 (1A)		
3143 (0C47)	〃	144 (90)		
3144 (0C48)	〃	250 (FA)		
3145 (0C49)	〃	0 (00)		
3146 (0C4A)	〃	27 (1B)		
3147 (0C4B)	〃	38 (26)		
3148 (0C4C)	〃	26 (1A)		
3149 (0C4D)	〃	144 (90)		
3150 (0C4E)	〃	27 (1B)		
⚠1 3151 (0C4F)	〃	188 (BC)		
3152 (0C50)	〃	26 (1A)		
3153 (0C51)	〃	144 (90)		
3154 (0C52)	〃	26 (1A)		
3155 (0C53)	〃	244 (F4)		
3156 (0C54)	〃	26 (1A)		
3157 (0C55)	〃	144 (90)		
3158 (0C56)	〃	1 (01)		

ADDRESS	CONTENTS	⚠1 VER. 1.24 or Previous VER		REMARKS
3159 (0C57)	CAMERA CONTROL DATA	144 (90)		
3160 (0C58)	〃	1 (01)		
3161 (0C59)	〃	144 (90)		
3162 (0C5A)	〃	2 (02)		
3163 (0C5B)	〃	194 (C2)		
3164 (0C5C)	〃	9 (09)		
3165 (0C5D)	〃	196 (C4)		
3166 (0C5E)	〃	9 (09)		
3167 (0C5F)	〃	96 (60)		
3168 (0C60)	〃	8 (08)		
3169 (0C61)	〃	252 (FC)		
3170 (0C62)	〃	8 (08)		
3171 (0C63)	〃	152 (98)		
3172 (0C64)	〃	7 (07)		
3173 (0C65)	〃	20 (14)		
3174 (0C66)	〃	36 (24)		
3175 (0C67)	〃	24 (18)		
3176 (0C68)	〃	100 (64)		
3177 (0C69)	〃	40 (28)		
3178 (0C6A)	〃	25 (19)		
3179 (0C6B)	〃	200 (C8)		
3180 (0C6C)	〃	147 (93)		
3181 (0C6D)	〃	83 (53)		
3182 (0C6E)	〃	15 (0F)		
3183 (0C6F)	〃	200 (C8)		
3184 (0C70)	〃	10 (0A)		
3185 (0C71)	〃	60 (3C)		
3186 (0C72)	〃	5 (05)		
3187 (0C73)	UNUSED			
3188 (0C74)	CAMERA CONTROL DATA	125 (7D)		
3189 (0C75)	〃	50 (32)		
3190 (0C76)	AE ADJUSTMENT	—		
3191 (0C77)	〃	—		
3192 (0C78)	〃	—		
3193 (0C79)	CAMERA CONTROL DATA	10 (0A)		
3194 (0C7A)	〃	2 (02)		
3195 (0C7B)	〃	10 (0A)		
3196 (0C7C)	UNUSED			

ADDRESS	CONTENTS	⚠1 VER. 1.24 or Previous VER		REMARKS
3197 (0C7D)	CAMERA CONTROL DATA	34 (22)		
3198 (0C7E)	〃	100 (64)		
3199 (0C7F)	〃	0 (00)		
3200 (0C80)	〃	0 (00)		
3201 (0C81)	〃	60 (3C)		
3202 (0C82)	〃	0 (00)		
3203 (0C83)	〃	0 (00)		
3204 (0C84)	〃	⚠1 96 (60)		
3205 (0C85)	〃	2 (02)		
3206 (0C86)	〃	2 (02)		
3207 (0C87)	〃	50 (32)		
3208 (0C88)	〃	25 (19)		
3209 (0C89)	〃	200 (C8)		
3210 (0C8A)	UNUSED			
3211 (0C8B)	CAMERA CONTROL DATA	2 (02)		
3212 (0C8C)	TTL ADJUSTMENT	—		
3213 (0C8D)	CAMERA CONTROL DATA	0 (00)		
3214 (0C8E)	TTL ADJUSTMENT	—		
3215 (0C8F)	〃	—		
3216 (0C90)	CAMERA CONTROL DATA	27 (1B)		
3217 (0C91)	〃	188 (BC)		
3218 (0C92)	〃	26 (1A)		
3219 (0C93)	〃	144 (90)		
3220 (0C94)	〃	26 (1A)		
3221 (0C95)	〃	244 (F4)		
3222 (0C96)	〃	26 (1A)		
3223 (0C97)	〃	144 (90)		
3224 (0C98)	〃	27 (1B)		
3225 (0C99)	〃	238 (EE)		
3226 (0C9A)	〃	26 (1A)		
3227 (0C9B)	〃	144 (90)		
3228 (0C9C)	〃	27 (1B)		
3229 (0C9D)	〃	38 (26)		
3230 (0C9E)	〃	26 (1A)		
3231 (0C9F)	〃	144 (90)		
3232 (0CA0)	〃	27 (1B)		
3233 (0CA1)	〃	188 (BC)		
3234 (0CA2)	〃	26 (1A)		

ADDRESS	CONTENTS	⚠1 VER.1.24 or Previous VER		REMARKS
3235 (0CA3)	CAMERA CONTROL DATA	144 (90)		
3236 (0CA4)	〃	26 (1A)		
3237 (0CA5)	〃	244 (F4)		
3238 (0CA6)	〃	26 (1A)		
3239 (0CA7)	〃	144 (90)		
3240 (0CA8)	〃	27 (1B)		
3241 (0CA9)	〃	188 (BC)		
3242 (0CAA)	〃	26 (1A)		
3243 (0CAB)	〃	144 (90)		
3244 (0CAC)	〃	26 (1A)		
3245 (0CAD)	〃	244 (F4)		
3246 (0CAE)	〃	26 (1A)		
3247 (0CAF)	〃	144 (90)		
3248 (0CB0) | 3327 (0CFF)	UNUSED			
3328 (0D00)	CHECK SUM DATA	—		
3329 (0D01) | 3342 (0D0E)	AF ADJUSTMENT	— | —		
3343 (0D0F)	CAMERA CONTROL DATA	39 (27)		
3344 (0D10)	〃	85 (55)		
3345 (0D11)	〃	25 (19)		
3346 (0D12)	〃	60 (3C)		
3347 (0D13)	〃	29 (1D)		
3348 (0D14)	〃	30 (1E)		
3349 (0D15)	〃	30 (1E)		
3350 (0D16)	〃	44 (2C)		
3351 (0D17)	〃	22 (16)		
3352 (0D18)	〃	34 (22)		
3353 (0D19)	〃	30 (1E)		
3354 (0D1A)	〃	44 (2C)		
3355 (0D1B)	〃	22 (16)		
3356 (0D1C)	〃	34 (22)		
3357 (0D1D)	〃	30 (1E)		
3358 (0D1E) | 3469 (0D8D)	AF ADJUSTMENT	— | —		

ADDRESS	CONTENTS	⚠1 VER. 1.24 or Previous VER		REMARKS
3470 (0D8E)	CAMERA CONTROL DATA	0 (00)		
|		|		
3483 (0D9B)		0 (00)		
3484 (0D9C)	〃	194 (C2)		
3485 (0D9D)	〃	7 (07)		
3486 (0D9E)	〃	5 (05)		
3487 (0D9F)	〃	245 (F5)		
3488 (0DA0)	〃	248 (F8)		
3489 (0DA1)	UNUSED			
|				
3516 (0DBC)				
3517 (0DBD)	CAMERA CONTROL DATA	0 (00)		
3518 (0DBE)	UNUSED			
|				
3521 (0DC1)				
3522 (0DC2)	CAMERA CONTROL DATA	0 (00)		
3523 (0DC3)	〃	0 (00)		
3524 (0DC4)	〃	0 (00)		
3525 (0DC5)	AF ADJUSTMENT	—		
3526 (0DC6)	〃	—		
3527 (0DC7)	CAMERA CONTROL DATA	154 (9A)		
3528 (0DC8)	UNUSED			
3529 (0DC9)	CAMERA CONTROL DATA	20 (14)		
3530 (0DCA)	〃	4 (04)		
3531 (0DCB)	〃	179 (B3)		
3532 (0DCC)	〃	51 (33)		
3533 (0DCD)	〃	0 (00)		
3534 (0DCE)	〃	58 (3A)		
3535 (0DCF)	〃	0 (00)		
3536 (0DD0)	〃	40 (28)		
3537 (0DD1)	〃	16 (10)		
3538 (0DD2)	UNUSED			
3539 (0DD3)	UNUSED			
3540 (0DD4)	CAMERA CONTROL DATA	122 (7A)		
3541 (0DD5)	AF ADJUSTMENT	—		
|		⚠1 |		
3568 (0DF0)		—		
3569 (0DF1)	CAMERA CONTROL DATA	10 (0A)		

ADDRESS	CONTENTS	⚠1 VER. 1.24 or Previous VER		REMARKS
3570 (0DF2)	CAMERA CONTROL DATA	2 (02)		
3571 (0DF3)	〃	0 (00)		
3572 (0DF4)	〃	6 (06)		
3573 (0DF5)	〃	234 (EA)		
3574 (0DF6)	〃	246 (F6)		
3575 (0DF7)	〃	2 (02)		
3576 (0DF8)	〃	14 (0E)		
3577 (0DF9)	〃	26 (1A)		
3578 (0DFA)	〃	38 (26)		
3579 (0DFB)	〃	50 (32)		
3580 (0DFC)	〃	62 (3E)		
3581 (0DFD)	〃	74 (4A)		
3582 (0DFE)	〃	246 (F6)		
3583 (0DFF)	〃	2 (02)		
3584 (0E00)	〃	14 (0E)		
3585 (0E01)	〃	26 (1A)		
3586 (0E02)	〃	38 (26)		
3587 (0E03)	〃	50 (32)		
3588 (0E04)	〃	70 (46)		
3589 (0E05)	〃	74 (4A)		
3590 (0E06)	〃	254 (FE)		
3591 (0E07)	〃	9 (09)		
3592 (0E08)	〃	26 (1A)		
3593 (0E09)	〃	38 (26)		
3594 (0E0A)	〃	50 (32)		
3595 (0E0B)	〃	62 (3E)		
3596 (0E0C)	〃	74 (4A)		
3597 (0E0D)	〃	58 (3A)		
3598 (0E0E)	〃	5 (05)		
3599 (0E0F)	UNUSED			
3600 (0E10)	CAMERA CONTROL DATA	128 (80)		
3601 (0E11)	〃	0 (00)		
3602 (0E12)	〃	125 (7D)		
3603 (0E13)	〃	125 (7D)		
3604 (0E14)	〃	1 (01)		
3605 (0E15)	〃	0 (00)		
3606 (0E16)	〃	0 (00)		
3607 (0E17)	〃	48 (30)		

ADDRESS	CONTENTS	⚠1 VER.1.24 or Previous VER		REMARKS
3608 (0E18)	CAMERA CONTROL DATA	16 (10)		
3609 (0E19)	〃	58 (3A)		
3610 (0E1A)	〃	0 (00)		
3611 (0E1B)	〃	48 (30)		
3612 (0E1C)	〃	16 (10)		
3613 (0E1D)	〃	58 (3A)		
3614 (0E1E)	〃	0 (00)		
3615 (0E1F)	〃	48 (30)		
3616 (0E20)	〃	16 (10)		
3617 (0E21)	〃	58 (3A)		
3618 (0E22)	〃	20 (14)		
3619 (0E23)	〃	23 (17)		
3620 (0E24)	〃	32 (20)		
3621 (0E25)	〃	51 (33)		
3622 (0E26)	〃	104 (68)		
3623 (0E27)	〃	64 (40)		
3624 (0E28)	〃	32 (20)		
3625 (0E29)	〃	25 (19)		
3626 (0E2A)	〃	100 (64)		
3627 (0E2B)	〃	100 (64)		
3628 (0E2C)	〃	51 (33)		
3629 (0E2D)	〃	4 (04)		
3630 (0E2E)	〃	32 (20)		
3631 (0E2F)	〃	102 (66)		
3632 (0E30)	〃	36 (24)		
3633 (0E31)	〃	64 (40)		
3634 (0E32)	UNUSED			
3635 (0E33)	CAMERA CONTROL DATA	38 (26)		
3636 (0E34)	〃	64 (40)		
3637 (0E35)	〃	13 (0D)		
3638 (0E36)	〃	128 (80)		
3639 (0E37)	〃	26 (1A)		
3640 (0E38)	〃	205 (CD)		
3641 (0E39)	〃	1 (01)		
3642 (0E3A)	〃	1 (01)		
3643 (0E3B)	〃	128 (80)		
3644 (0E3C)	〃	20 (14)		
3645 (0E3D)	〃	80 (50)		

ADDRESS	CONTENTS	⚠1 VER.1.24 or Previous VER		REMARKS
3646 (0E3E)	CAMERA CONTROL DATA	200 (C8)		
3647 (0E3F)	〃	0 (00)		
3648 (0E40)	〃	12 (0C)		
3649 (0E41)	〃	0 (00)		
3650 (0E42)	〃	0 (00)		
3651 (0E43)	〃	20 (14)		
3652 (0E44)	〃	40 (28)		
3653 (0E45)	〃	40 (28)		
3654 (0E46)	〃	102 (66)		
3655 (0E47)	〃	63 (3F)		
3656 (0E48)	〃	6 (06)		
3657 (0E49)	〃	55 (37)		
3658 (0E4A)	〃	102 (66)		
3659 (0E4B)	〃	63 (3F)		
3660 (0E4C)	〃	102 (66)		
3661 (0E4D)	〃	63 (3F)		
3662 (0E4E)	〃	137 (89)		
3663 (0E4F)	〃	53 (35)		
3664 (0E50)	〃	137 (89)		
3665 (0E51)	〃	53 (35)		
3666 (0E52)	〃	6 (06)		
3667 (0E53)	〃	53 (35)		
3668 (0E54)	〃	137 (89)		
3669 (0E55)	〃	54 (36)		
3670 (0E56)	〃	3 (03)		
3671 (0E57)	〃	232 (E8)		
3672 (0E58)	UNUSED			
｜				
4063 (0FDF)				
4064 (0FE0)	FOR PROCESS CONTROL	—		
｜		｜		
4095 (0FFF)		—		

2. Tools

1. For camera

※ : New tool

Tool No.	Name of tool	DESCRIPTION
J18266	AF ADJUSTMENT LENS (1m)	For F5
J18268-1	SUB MIRROR INSPECTION TOOL	For F5、F100
J18197	TOOL MIRROR	For F90
J18273	Multi CAM 1300 AF CHART	For F5
※ J15365	CABLE FOR POWER SUPPLY (CAMERA)	For D1
※ T93004	SI PLATE REMOVE TOOL	For F100、D1
※ J15364	D1 1005 CCD SENSER POSITIONING TOOL	For D1
※ T93003	NUT DRIVER (4.0mm)	For D1
※ J18310A	ADJUSTMENT FD FOR D1	For NEC 5.0 inch
※ J18310B	ADJUSTMENT FD FOR D1	For NEC 3.5 inch
※ J18310C	ADJUSTMENT FD FOR D1	For IBM 5.0 inch
※ J18310D	ADJUSTMENT FD FOR D1	For IBM 3.5 inch

2. Shooting image adjustment and TFT adjustment

※ : New tool

Tool No.	Name of tool	DESCRIPTION
※ J61185	TOOL LENS FOR D1	For D1
※ J63064	FILTER (ND1) FOR D1	For D1
※ J63065	FILTER (ND3) FOR D1	For D1
※ J63066	FILTER HOLDER	For D1
※ J63067	GRAYCHART Note:1	For D1
※ J63060	IEEE CARD (JAPANESE)	For D1
※ J63061	IEEE CARD (ENGLISH)	For D1
J63049	COLLOR VIEWER	For Dijital camera
※ J63068	LUMINANCE METER BM-3000 Note:2	For D1
J63053	COLLOR CHART	For Dijital camera
※ J65033A	IMAGE SENSER ADUSTMENT SOFT FOR D1 (JAPANESE)	For IBM 3.5 inch
※ J65033B	IMAGE SENSER ADUSTMENT SOFT FOR D1 (ENGLISH)	For IBM 3.5 inch
※ J63069	BLOCK GAUGE (1.00mm & 0.83mm)	For D1

Note 1 : Usable for Cool Pix 600 as well.

Note 2 : Unnecessary if the luminance meter BM300 is already maintained.